NOT MEASUREMENT SENSITIVE

MIL-STD-40051A(TM)
2 March 1999

SUPERSEDING
MIL-STD-40051
31 July 1996

DEPARTMENT OF DEFENSE STANDARD PRACTICE

PREPARATION OF DIGITAL TECHNICAL INFORMATION FOR MULTI-OUTPUT PRESENTATION OF TECHNICAL MANUALS

AMSC A7329 **AREA TMSS**

DISTRIBUTION STATEMENT A. Approved for public release; distribution is unlimited.

NOTICE OF CHANGE

NOT MEASUREMENT SENSITIVE

MIL-STD-40051A(TM)
NOTICE 1
15 February 2001

DEPARTMENT OF DEFENSE
STANDARD PRACTICE

PREPARATION OF DIGITAL TECHNICAL INFORMATION FOR MULTI-OUTPUT PRESENTATION OF TECHNICAL MANUALS

TO ALL HOLDERS OF MIL-STD-40051A:
1. THE FOLLOWING PAGES OF MIL-STD-40051A HAVE BEEN REVISED AND SUPERSEDE THE PAGES LISTED:

NEW PAGE	DATE	SUPERSEDED PAGE	DATE
BASIC			
vii	15 Feb 01	vii	2 Mar 99
viii	2 Mar 99	viii	Reprinted without change
1-4	15 Feb 01	2-4	2 Mar 99
19	2 Mar 99	19	Reprinted without change
20	15 Feb 01	20	2 Mar 99
25	15 Feb 01	25	2 Mar 99
26	2 Mar 99	26	Reprinted without change
29	15 Feb 01	29	2 Mar 99
30	15 Feb 01	30	2 Mar 99
31	15 Feb 01	31	2 Mar 99
32	15 Feb 01	32	2 Mar 99
35	2 Mar 99	35	Reprinted without change
36	15 Feb 01	36	2 Mar 99
37	2 Mar 99	37	Reprinted without change
38	15 Feb 01	38	2 Mar 99
39	15 Feb 01	39	2 Mar 99
40	2 Mar 99	40	Reprinted without change

NEW PAGE	DATE	SUPERSEDED PAGE	DATE
BASIC (CONT)			
41	2 Mar 99	41	Reprinted without change
42	15 Feb 01	42	2 Mar 99
45	2 Mar 99	45	Reprinted without change
46	15 Feb 01	46	2 Mar 99
49	15 Feb 01	49	2 Mar 99
50	2 Mar 99	50	Reprinted without change
63	15 Feb 01	63	2 Mar 99
64	2 Mar 99	64	Reprinted without change
69	15 Feb 01	69	2 Mar 99
70-71	2 Mar 99	70-71	Reprinted without change
72	15 Feb 01	72	2 Mar 99
79	2 Mar 99	79	Reprinted without change
80	15 Feb 01	80	2 Mar 99
85	15 Feb 01	85	2 Mar 99
86-87	2 Mar 99	86-87	Reprinted without change
88-89	15 Feb 01	88-89	2 Mar 99
90	2 Mar 99	90	Reprinted without change
101	15 Feb 01	101	2 Mar 99
102	2 Mar 99	102	Reprinted without change
109	2 Mar 99	109	Reprinted without change
110	15 Feb 01	110	2 Mar 99
115-118	15 Feb 01	115-118	2 Mar 99
119	2 Mar 99	119	Reprinted without change
120	15 Feb 01	120	2 Mar 99
127	15 Feb 01	127	2 Mar 99
128	2 Mar 99	128	Reprinted without change
133	15 Feb 01	133	2 Mar 99
134	2 Mar 99	134	Reprinted without change
139	15 Feb 01	139	2 Mar 99
140	2 Mar 99	140	Reprinted without change
147	15 Feb 01	147	2 Mar 99
148	2 Mar 99	148	Reprinted without change

NEW PAGE	DATE	SUPERSEDED PAGE	DATE
157	2 Mar 99	157	Reprinted without change
158	15 Feb 01	158	2 Mar 99
163	15 Feb 01	163	2 Mar 99
164	2 Mar 99	164	Reprinted without change
169	15 Feb 01	169	2 Mar 99
170	2 Mar 99	170	Reprinted without change
181	15 Feb 01	181	2 Mar 99
182	2 Mar 99	182	Reprinted without change
PART 1			
1	15 Feb 01	1	2 Mar 99
2	2 Mar 99	2	Reprinted without change
PART 2			
1	15 Feb 01	1	2 Mar 99
2	2 Mar 99	2	Reprinted without change
3	2 Mar 99	3	Reprinted without change
4	15 Feb 01	4	2 Mar 99
4a	15 Feb 01	New page	
4b blank	15 Feb 01	New page	
PART 3			
1	2 Mar 99	1	Reprinted without change
2	15 Feb 01	2	2 Mar 99
7	15 Feb 01	7	2 Mar 99
8	2 Mar 99	8	Reprinted without change
PART 4			
1	2 Mar 99	1	Reprinted without change
2	15 Feb 01	2	2 Mar 99
3	15 Feb 01	3	2 Mar 99
4	15 Feb 01	4	2 Mar 99
5	15 Feb 01	5	2 Mar 99
6	2 Mar 99	6	Reprinted without change
17	15 Feb 01	17	2 Mar 99
18	2 Mar 99	18	Reprinted without change

NEW PAGE	DATE	SUPERSEDED PAGE	DATE
PART 4 (CONT)			
31	2 Mar 99	31	Reprinted without change
32	15 Feb 01	32	2 Mar 99
41	2 Mar 99	41	Reprinted without change
42	15 Feb 01	42	2 Mar 99
PART 5			
1	2 Mar 99	1	Reprinted without change
2	15 Feb 01	2	2 Mar 99
11	2 Mar 99	11	Reprinted without change
12	15 Feb 01	12	2 Mar 99
PART 6			
1	2 Mar 99	1	Reprinted without change
2	15 Feb 01	2	2 Mar 99
19	2 Mar 99	19	Reprinted without change
20	15 Feb 01	20	2 Mar 99
DD Form 1426	15 Feb 01	DD Form 1426	2 Mar 99

2. Changes are indicated by a vertical bar in the margin of the page. Changes to the matrixes in appendix A are indicated by gray shading.

3. RETAIN THIS NOTICE AND INSERT BEFORE TABLE OF CONTENTS.

4. Holders of MIL-STD-40051A will verify that page changes and additions indicated above have been entered. This notice page will be retained as a check sheet. This issuance, together with appended pages, is a separate publication. Each notice is to be retained by stocking points until the standard is completely revised or canceled.

Custodians:

Army - TM

Review Activities:

Army - AC1, AL, AR, AT, AV, CR, EA, MI, PT

Preparing Activity:

Army - TM

Project Number:

TMSS A362

AMSC A7329

AREA TMSS

FOREWORD

1. This standard is approved for use by the Department of the Army and is available for use by all Departments and Agencies of the Department of Defense (DoD).

2. This MIL-STD-40051A series establishes the technical content requirements and mandatory style and format requirements for the preparation of page-based and frame-based technical manuals (TMs) and subsequent revisions required to support the various types of equipment and weapon systems within the Department of the Army. The requirements contained in this standard cover operation and maintenance at all levels through overhaul (depot), including Depot Maintenance Work Requirements (DMWRs).

3. This 7-part book form consists of the following parts.

MIL-STD-40051A	-	Preparation of Digital Technical Information for Multi-Output Presentation of Technical Manuals
MIL-STD-40051-1A	-	Description and Theory of Operation
MIL-STD-40051-2A	-	Operator Instructions
MIL-STD-40051-3A	-	Troubleshooting Procedures
MIL-STD-40051-4A	-	Maintenance Instructions
MIL-STD-40051-5A	-	Parts Information (PI) and Repair Parts and Special Tools List (RPSTL)
MIL-STD-40051-6A	-	Supporting Information

4. Beneficial comments (recommendations, additions, deletions) and any pertinent data which may be of use in improving this document should be addressed to: Executive Director, USAMC Logistics Support Activity, ATTN: AMXLS-AP, Redstone Arsenal, AL 35898-7466, by using the self-addressed Standardization Document Improvement Proposal (DD Form 1426) appearing at the end of the document or by letter.

CONTENTS

PARAGRAPH PAGE

FOREWORD ii

1. **SCOPE** 1
1.1 Scope 1

2. **APPLICABLE DOCUMENTS** 1
2.1 General 1
2.2 Government documents 1
2.2.1 Specifications, standards and handbooks 1
2.2.2 Other Government documents and publications 3
2.3 Non-Government publications 4
2.4 Order of precedence 5

3. **DEFINITIONS** 5

4. **GENERAL REQUIREMENTS** 20
4.1 General 20
4.2 Types of technical manuals 20
4.3 Selective application and tailoring 20
4.4 Preparation of digital data for electronic delivery 20
4.5 Use of the DTDs/FOSIs 20
4.5.1 Page-based TMs 20
4.5.2 Frame-based TMs 20
4.6 Obtaining the DTDs/FOSIs 20
4.7 Style and format 21
4.8 Style and format requirements for technical content of page-based TMs 21
4.8.1 Examples of style and format 21
4.8.2 TM divisions 21
4.8.2.1 Volume size and content 21
4.8.2.2 Chapters. 21
4.8.2.3 Work packages 21
4.8.2.3.1 Work package size 22
4.8.2.3.2 Work package content 22
4.8.2.3.3 Development of individual work packages 22
4.8.3 Type size and style 23
4.8.4 Page size and orientation 23
4.8.5 Foldout pages 23
4.8.6 Final reproducible copy (FRC) 23
4.8.7 Warnings, cautions, and notes 24
4.8.7.1 Use and placement 24
4.8.7.2 Icons 24
4.8.7.2.1 Development of icons 24
4.8.7.2.2 Safety warnings with icons. 24

CONTENTS

PARAGRAPH PAGE

4.8.7.2.3 Hazardous materials warnings with icons 24
4.8.7.2.3.1 Format for hazardous materials warnings with icons 25
4.8.8 Chapters 25
4.8.8.1 Chapter title page 25
4.8.8.2 Chapter numbering 25
4.8.9 Work packages 25
4.8.9.1 Work package title block 25
4.8.9.2 Work package sequential numbering 25
4.8.9.2.1 Assignment of the last two digits of the work package sequence number 25
4.8.9.2.2 Assignment of work package sequence numbers in volumized TMs 25
4.8.9.3 Work package page numbering 26
4.8.9.4 Work package identification number 26
4.8.10 Maintenance tasks and descriptive information 27
4.8.11 Paragraphs 27
4.8.11.1 Paragraph numbering 27
4.8.11.2 Paragraphs and subparagraph titles 27
4.8.12 Procedural steps 27
4.8.12.1 Procedural step titles 27
4.8.13 Tables and lists 27
4.8.13.1 Table locations 27
4.8.13.2 Table numbering 27
4.8.13.3 Table titles 27
4.8.13.4 Table format 27
4.8.13.5 Standard information tables 27
4.8.13.6 Footnotes to tables 28
4.8.13.7 Tabular information 28
4.8.13.8 Lists 28
4.8.14 Placement of text 29
4.8.15 Placement of illustrations 29
4.8.15.1 Rotating illustrations 29
4.8.15.2 Placement of text and related illustrations for pocket TMs 29
4.8.15.3 Repeating illustrations 29
4.8.16 Margin data 29
4.8.16.1 Headers 29
4.8.16.2 Footers 30
4.8.16.2.1 Page numbering 30
4.8.16.2.1.1 Front matter 30
4.8.16.2.1.2 Rear matter 30
4.8.16.2.1.3 Blank pages 30
4.8.17 Abbreviations and acronyms 30
4.8.18 Symbols 31
4.8.18.1 General information for symbols 31
4.8.18.2 Metric symbols 31

CONTENTS

PARAGRAPH PAGE

4.8.19 Nuclear hardness (hardness-critical processes) marking 31
4.8.20 Electrostatic Discharge (ESD) sensitive marking 31
4.8.21 Quality Assurance (QA) symbol 32
4.8.22 Security classification, emergency page and protective markings 32
4.8.22.1 Security classification markings 32
4.8.22.2 Overall security classification 32
4.8.22.3 Blank page backing a classified page 32
4.8.22.4 Emergency page markings 32
4.8.22.5 Protective markings 32
4.8.22.6 COMSEC protective markings 32
4.8.23 Referencing 32
4.8.23.1 Other documents 32
4.8.23.2 Government specifications and standards 32
4.8.23.3 Within the TM 33
4.8.23.4 Repeating information 33
4.8.23.5 Equipment, components, and parts. 33
4.8.23.6 National Stock Numbers (NSNs) and Part Numbers (P/Ns) 33
4.8.23.7 Equipment panel markings (placarding) 33
4.8.23.8 Metric and U.S. standard measurements 33
4.8.23.9 Temperature 33
4.8.23.10 TM divisions 33
4.8.23.11 Volumes 33
4.8.23.12 Work packages 33
4.8.23.13 Maintenance tasks, procedures, and paragraphs 33
4.8.23.14 Tables. 34
4.8.23.15 Footnotes 34
4.8.23.16 Figures and multisheet figures 34
4.8.23.17 Index numbers 34
4.8.23.18 Items on diagrams 34
4.8.24 Equations 34
4.8.25 Nomenclature 35
4.8.25.1 Nomenclature consistency and applicability 35
4.8.25.2 Official/approved nomenclature 35
4.8.25.3 Military terms 35
4.8.25.4 Automatic electronic test and checkout terminology 35
4.8.26 Comprehensibility 35
4.8.27 Graphics 35
4.8.27.1 Graphic format 35
4.8.27.2 Types of graphics 35
4.8.27.2.1 Line drawings 36
4.8.27.2.2 Multiview and multisheet illustrations 36
4.8.27.2.3 Photographs 36
4.8.27.2.3.1 Prescreened photographs 36

CONTENTS

PARAGRAPH PAGE

4.8.27.2.4 Engineering drawings 36
4.8.27.2.5 Diagrams 36
4.8.27.2.5.1 Diagram specifications. 36
4.8.27.2.5.2 Types of diagrams 37
4.8.27.2.6 Charts and graphs 37
4.8.27.2.7 Tools and test equipment illustrations 37
4.8.27.3 Elements of illustrations 37
4.8.27.3.1 Border rules and boxes 37
4.8.27.3.2 Use of the human figure 37
4.8.27.3.3 Credit lines 38
4.8.27.3.4 Callouts 38
4.8.27.3.4.1 Index numbers 38
4.8.27.3.4.2 RPSTL figures 38
4.8.27.3.5 Leader lines and arrowheads 38
4.8.27.3.6 Illustration legends 38
4.8.27.3.7 Procedures on illustrations 38
4.8.27.4 Graphic techniques 38
4.8.27.4.1 Illustration figure numbers 38
4.8.27.4.2 DMWR figure numbers 38
4.8.27.4.3 RPSTL figure numbering 39
4.8.27.4.4 Foldout figure numbering 39
4.8.27.4.5 Multisheet numbering 39
4.8.27.4.6 Illustration figure titles 39
4.8.27.4.7 Illustration identification numbers 39
4.8.27.4.8 Portraying signal flow 39
4.8.27.4.9 Color in illustrations 39
4.9 Style and format requirements for technical content of frame-based TMs 39
4.9.1 Development of work package technical manuals 39
4.9.2 IETM divisions 40
4.9.2.1 Work packages 40
4.9.2.1.1 Work package content 40
4.9.2.1.2 Parts information in work packages 40
4.9.2.1.3 Development of individual work packages 40
4.9.3 Font size and style 41
4.9.4 Use of alerts 41
4.9.5 Warnings, cautions, and notes 41
4.9.5.1 Use and placement 41
4.9.5.1.1 Display requirements for warnings, caution, and notes 41
4.9.5.2 Hazardous material warnings 42
4.9.6 Work packages 42
4.9.6.1 Work package initial setup information 42
4.9.6.2 Work package identification number 42
4.9.7 Maintenance tasks and descriptive information 43

CONTENTS

PARAGRAPH		PAGE
4.9.8	Paragraphs	43
4.9.8.1	Paragraph numbering	43
4.9.8.2	Paragraph titles	43
4.9.9	Procedural steps	43
4.9.9.1	Procedural step numbering	43
4.9.9.2	Procedural step titles	43
4.9.10	Tables and lists	43
4.9.10.1	Table locations	43
4.9.10.2	Table numbering	44
4.9.10.3	Table titles	44
4.9.10.4	Table format	44
4.9.10.5	Standard information tables	44
4.9.10.6	Footnotes to tables	44
4.9.10.7	Lists	44
4.9.11	Display of text	45
4.9.12	Display of illustrations	45
4.9.13	Title bar	45
4.9.14	Abbreviations and acronyms	45
4.9.15	Symbols	45
4.9.15.1	General information for symbols	45
4.9.15.2	Metric symbols	45
4.9.16	Nuclear hardness (hardness-critical processes) marking	45
4.9.17	Electrostatic Discharge (ESD) sensitive marking	46
4.9.18	Quality Assurance (QA) symbol	46
4.9.19	Security classification and protective markings	46
4.9.20	Referencing	46
4.9.20.1	Other documents	46
4.9.20.2	Government specifications and standards	46
4.9.20.3	Within the IETM	46
4.9.20.4	Equipment, components, and parts.	46
4.9.20.5	National Stock Numbers (NSNs) and Part Numbers (P/Ns)	46
4.9.20.6	Equipment panel markings (placarding)	47
4.9.20.7	Metric and U.S. standard measurements	47
4.9.20.8	Temperature	47
4.9.20.9	Other TMs/IETMs	47
4.9.20.10	Tables	47
4.9.20.11	Figures	47
4.9.20.12	Index numbers	47
4.9.20.13	Items on diagrams	47
4.9.21	Equations	47
4.9.22	Nomenclature	47
4.9.22.1	Nomenclature consistency and applicability	47
4.9.22.2	Official/approved nomenclature	48

SUPERSEDES PAGE vii OF MIL-STD-40051A

CONTENTS

PARAGRAPH PAGE

4.9.22.3 Military terms 48
4.9.22.4 Automatic electronic test and checkout terminology 48
4.9.23 Multimedia presentation 48
4.9.24 Graphics 48
4.9.24.1 Graphic format 48
4.9.24.2 Types of graphics 48
4.9.24.2.1 Line drawings 49
4.9.24.2.2 Multiview illustrations 49
4.9.24.2.3 Digital Photographs 49
4.9.24.2.4 Engineering drawings 49
4.9.24.2.5 Diagrams 49
4.9.24.2.5.1 Diagram specifications 49
4.9.24.2.5.2 Types of diagrams 50
4.9.24.2.6 Tools and test equipment illustrations 50
4.9.24.3 Elements of illustrations 50
4.9.24.3.1 Border rules and boxes 50
4.9.24.3.2 Use of the human figure 50
4.9.24.3.3 Credit lines 50
4.9.24.3.4 Callouts 50
4.9.24.3.4.1 Index numbers 51
4.9.24.3.5 Leader lines and arrowheads 51
4.9.24.3.6 Illustration legends 51
4.9.24.3.7 Procedures on illustrations 51
4.9.24.4 Graphic techniques 51
4.9.24.4.1 Illustration figure numbers 51
4.9.24.4.2 Illustration figure titles 51
4.9.24.4.3 Illustration identification numbers 51
4.9.24.4.4 Portraying signal flow 51
4.9.24.4.5 Color in illustrations 51
4.10 Changes/Revisions 52
4.10.1 Changes for page-based TMs 52
4.10.1.1 Changes 52
4.10.1.2 Changed work packages 52
4.10.1.3 Changed front and rear matter pages 52
4.10.1.4 Change symbols 52
4.10.1.5 Change symbols for illustrations 53
4.10.1.6 Changes to RPSTL supporting information work packages and TMs 53
4.10.2 Complete revisions for page-based TMs 53
4.10.3 Revisions for frame-based TMs 54
4.10.3.1 Revision symbols 54
4.10.3.2 Revision symbols for illustrations 54

5. **DETAILED REQUIREMENTS** 54

REPRINTED WITHOUT CHANGE

CONTENTS

PARAGRAPH PAGE

5.1 Technical content preparation 54
5.2 Introductory information preparation 55
5.3 Preparation of front and rear matter for page-based TMs 55
5.3.1 Front matter 55
5.3.1.1 Front cover 56
5.3.1.1.1 TM number for joint service TMs 57
5.3.1.1.2 Availability statement **(depot only)** 57
5.3.1.1.3 Disclosure notice 57
5.3.1.1.4 Distribution statement 57
5.3.1.1.5 Destruction notice 57
5.3.1.1.6 TM date 57
5.3.1.1.7 Change designator and date 57
5.3.1.1.8 For Army communications security (COMSEC) manuals use. 57
5.3.1.2 Warning summary (including first aid data) 58
5.3.1.2.1 Preventive maintenance services and phased maintenance inspection manuals warning data **(aviation only)** 58
5.3.1.3 Change transmittal page 58
5.3.1.4 List of effective pages/work packages 58
5.3.1.5 Title block page 58
5.3.1.5.1 Reporting errors and recommending improvements statement 58
5.3.1.6 Table of contents 59
5.3.1.7 "How To Use This Manual" information 60
5.3.1.7.1 International standardization agreements 60
5.3.1.8 Introduction work package (**Troubleshooting TMs only**) 61
5.3.1.9 General information work package 61
5.3.1.9.1 Scope 61
5.3.1.9.2 Maintenance forms, records, and reports 61
5.3.1.9.3 Reporting equipment improvement recommendations 62
5.3.1.9.4 Hand receipt (HR) manuals 62
5.3.1.9.5 Corrosion prevention and control 62
5.3.1.9.6 Ozone depleting substances (ODS) 62
5.3.1.9.7 Destruction of Army materiel to prevent enemy use 62
5.3.1.9.8 Preparation for storage or shipment 63
5.3.1.9.9 Warranty information 63
5.3.1.9.10 Nomenclature cross-reference list 63
5.3.1.9.11 List of abbreviations/acronyms 63
5.3.1.9.12 Quality Assurance (QA) **(depot and aviation only)** 63
5.3.1.9.13 Quality of material 63
5.3.1.9.14 Safety, care, and handling 63
5.3.1.9.15 Nuclear hardness 64
5.3.1.9.16 Security measures for electronic data 64
5.3.1.9.17 Calibration 64
5.3.1.9.18 Engineering Change Proposals (ECPs) **(depot only)** 65
5.3.1.9.18.1 Modification Work Order (MWO) and Engineering Change

CONTENTS

PARAGRAPH		PAGE
	Proposals (ECPs) list **(depot only)**	65
5.3.1.9.19	Deviations and exceptions **(depot only)**	65
5.3.1.9.20	Mobilization requirements **(depot only)**	65
5.3.1.9.21	Flight safety critical aircraft parts (FSCAP)	65
5.3.1.9.22	Cost considerations **(depot only)**	66
5.3.1.9.23	Copyright credit line	66
5.3.1.9.24	Supporting information for repair parts, special tools, TMDE, and support equipment	66
5.3.1.9.24.1	Common tools and equipment	66
5.3.1.9.24.2	Special tools, TMDE, and support equipment	66
5.3.1.9.24.3	Repair parts	66
5.3.1.10	General information work package **(Preventive Maintenance Services Manual only)**	67
5.3.1.10.1	Maintenance activities	67
5.3.1.10.2	General information	67
5.3.1.11	General information work package	68
5.3.2	Rear matter	73
5.3.2.1	Glossary	73
5.3.2.2	Alphabetical index	73
5.3.2.3	Foldout pages	73
5.3.2.4	Reporting errors and recommending improvements DA Form 2028	73
5.3.2.5	Authentication page	73
5.3.2.6	Back cover	74
5.4	Preparation of introductory matter and planning information for frame-based TMs	74
5.4.1	Introductory matter	74
5.4.1.1	IETM installation data	75
5.4.1.2	CD content frame	75
5.4.1.3	Revision summary frame	75
5.4.1.4	Identification information	76
5.4.1.4.1	TM number for joint service IETMs	76
5.4.1.4.2	Availability statement **(depot only)**	76
5.4.1.4.3	Disclosure notice	76
5.4.1.4.4	Distribution statement	76
5.4.1.4.5	Destruction notice	76
5.4.1.4.6	TM date	76
5.4.1.4.7	For Army communications security (COMSEC) manuals use	76
5.4.1.5	List of contents	76
5.4.1.6	"How To Use This IETM" information	77
5.4.1.7	General information work package	77
5.4.1.7.1	Scope	77
5.4.1.7.2	Reporting errors and recommending improvements statement	77
5.4.1.7.3	Maintenance forms, records, and reports	78
5.4.1.7.4	Reporting equipment improvement recommendations	78

CONTENTS

PARAGRAPH PAGE

5.4.1.7.5 Hand receipt (HR) information 79
5.4.1.7.6 Corrosion prevention and control 79
5.4.1.7.7 Ozone depleting substances (ODS) 79
5.4.1.7.8 Destruction of Army materiel to prevent enemy use 79
5.4.1.7.9 Preparation for storage or shipment 79
5.4.1.7.10 Warranty information 80
5.4.1.7.11 Nomenclature cross-reference list 80
5.4.1.7.12 List of abbreviations / acronyms 80
5.4.1.7.13 Quality Assurance (QA) **(DMWR and aviation only)** 80
5.4.1.7.14 Quality of material 80
5.4.1.7.15 Safety, care, and handling 80
5.4.1.7.16 Nuclear hardness 81
5.4.1.7.17 Security measures for electronic data 81
5.4.1.7.18 Calibration 81
5.4.1.7.19 Engineering Change Proposals (ECPs) **(DMWR only)** 82
5.4.1.7.19.1 Modification Work Order (MWO) and Engineering Change Proposals (ECPs) list **(DMWR only)** 82
5.4.1.7.20 Deviations and exceptions **(DMWR only)** 82
5.4.1.7.21 Mobilization requirements **(DMWR only)** 82
5.4.1.7.22 Flight safety critical aircraft parts (FSCAP) 82
5.4.1.7.23 Cost considerations **(DMWR only)** 83
5.4.1.7.24 Copyright credit line 83
5.4.1.8 General information work package **(Preventive Maintenance Services only)** 83
5.4.1.8.1 Maintenance activities 83
5.4.1.8.2 General information 83
5.4.1.9 General information work package 85
5.4.2 Additional introductory information work packages 89
5.4.3 Alphabetical index 89
5.4.4 Reporting errors and recommending improvements DA Form 2028 89

6. **NOTES** 90
6.1 Intended use 90
6.2 Issue of DODISS 90
6.3 Tailoring guidance 90
6.4 Subject term (key word) listing 90
6.5 Change from previous issue 90

FIGURE
1. Example of a maintenance work package. 91
2. List of safety warning icons 94
3. List of hazardous materials warnings icons 97

CONTENTS

PARAGRAPH PAGE

4. Example of a chapter title page 99
5. Example of a page with security classification markings 100
6. Example of emergency page markings 101
7. Example of a TM front cover 102
8. Example of a phased maintenance TM front cover 104
9. Example of a DMWR front cover 105
10. Example of a warning data page for phased maintenance inspection and preventive maintenance services 106
11. Example of a change transmittal page 107
12. Example of a list of effective pages/work packages 108
13. Example of a title block page, and reporting of errors and recommending improvements statement 109
14. Example of table of contents 110
15. Example of RPSTL table of contents 111
16. Example of an alphabetical index 112
17. Example of an authentication page 113

A TECHNICAL MANUAL CONTENT SELECTION MATRIXES 115

INDEX 175

1. SCOPE.

1.1 Scope. This standard establishes the technical content, style and format requirements for all technical manuals (TMs) for major weapon systems, and their related systems, subsystems, equipment, weapons replacement assemblies (WRAs), and shop replacement assemblies (SRAs). The requirements are applicable for all maintenance levels through overhaul (depot) including Depot Maintenance Work Requirements (DMWRs). The requirements can be used to develop TMs in a variety of output forms including interactive screen presentations (frame-based manuals) and paper paged-based manuals.

2. APPLICABLE DOCUMENTS.

2.1 General. The documents listed in this section are specified in sections 3, 4, and 5 of MIL-STD-40051-1A through MIL-STD-40051-6A. This section does not include documents cited in other sections of this multipart standard or recommended for additional information or as examples. While every effort has been made to ensure the completeness of this list, document users are cautioned that they must meet all specified requirements documents cited in section 3, 4, and 5 of MIL-STD-40051-1A through MIL-STD-40051-6A, whether or not they are listed.

2.2 Government documents.

2.2.1 Specifications, standards and handbooks. The following specifications, standards, and handbooks form a part of this document to the extent specified herein. Unless otherwise specified, the issues of these documents are those listed in the issue of the Department of Defense Index of Specifications and Standards (DoDISS) and supplement thereto, cited in the solicitation (see 6.2).

SPECIFICATIONS

DEPARTMENT OF DEFENSE

MIL-PRF-28000	—	Digital Representation for Communication of Product Data: IGES Application Subsets and IGES Application Protocols.
MIL-PRF-28001	—	Markup Requirements and Generic Style Specification for Electronic Printed Output and Exchange of Text.
MIL-PRF-28002	—	Raster Graphics Representation in Binary Format, Requirements for.
MIL-PRF-28003	—	Digital Representation for Communication of Illustration Data: CGM Application Profile.
MIL-PRF-87268	—	Manuals, Interactive Electronic Technical - General Content, Style, Format, and User-Interaction Requirements

SUPERSEDES PAGE 1 OF MIL-STD-40051A

STANDARDS

DEPARTMENT OF DEFENSE

MIL-STD-17	—	Mechanical Symbols.
MIL-STD-100	—	Engineering Drawing Practices.
MIL-STD-1309	—	Definition of Terms for Testing, Measurement, and Diagnostics.
MIL-STD-1686	—	Electrostatic Discharge Control Program for Protection of Electrical and Electronic Parts, Assemblies, and Equipment (Excluding Electrically Initiated Explosive Devices) (Metric).
MIL-STD-2361	—	Digital Publications Development.

HANDBOOKS

DEPARTMENT OF DEFENSE

MIL-HDBK-113	—	Guide for the Selection of Lubricants, Functional Fluids, Preservatives and Specialty Products for use in Ground Equipment Systems.
MIL-HDBK-263	—	Electrostatic Discharge Control Handbook for Protection of Electrical and Electronic Parts, Assemblies and Equipment, Excluding Electrically Initiated Explosive Devices (Metric).
MIL-HDBK-275	—	Guide for Selection of Lubricants, Fluids, and Compounds for Use in Flight Vehicles and Components.
MIL-HDBK-9660	—	Handbook for DoD-Produced CD-ROM Products.
MIL-HDBK-1222	—	Guide to the General Style and Format of U.S. Army Work Package Technical Manuals.

(Unless otherwise indicated, copies of the above specifications, standards, and handbooks are available from Standardization Documents Order Desk, 700 Robbins Avenue, Building 4D, Philadelphia, PA 19111-5094.)

H4/H8	—	Cataloging Handbook: Commercial and Government Entity Code (United States and Canada) - Name to Code.
H6	—	Federal Supply Cataloging Handbook.

(Copies of Handbooks H4/H8 and H6 are available from the Commander, Defense Logistics Services Center, Battle Creek, MI 49017-3084.)

SUPERSEDES PAGE 2 OF MIL-STD-40051A

2.2.2 Other Government documents and publications. The following other Government documents and publications form a part of this document to the extent specified herein. Unless specified otherwise, the issues are those cited in the solicitation.

AMC-R-702-32	—	Critical Safety Item Program
AR 385-62	—	Regulations for Firing Guided Missiles and Heavy Rockets for Training, Target Practice and Combat.
AR 385-64	—	U.S. Army Explosives Safety Program œ
CTA 50-970	—	Expendable/Durable Items (Except Medical, Class V, Repair Parts, and Heraldic Items).
DA PAM 385-64	—	Ammunition and Explosives Safety Standards œ
DA PAM 738-750	—	Functional Users Manual for The Army Maintenance Management System (TAMMS).
DA PAM 738-751	—	Functional Users Manual for The Army Maintenance Management System-Aviation (TAMMS-A).

(Application for copies should be addressed to U.S. Army Publications Distribution Center, 1655 Woodson Road, St. Louis, MO 63114-6181.)

DOD 5200.1-R	—	DoD Information Security Program.
DOD 5220.22-M	—	National Industrial Security Program for Operating Manual.
DOD 5230.24	—	Distribution Statements on Technical Documents.

(Copies of DOD 5200.1-R are available from the National Technical Information Service, U.S. Department of Commerce, 5285 Port Royal Road, Springfield, VA 22161. Copies of DOD 5220.22-M are available from the U.S. Government Printing Office, ATTN: Superintendent of Documents, Washington, DC 20402-0001. Copies of DOD 5230.24 are available from Standardization Documents Order Desk, Bldg 4D, 700 Robbins Avenue, Philadelphia, PA 19111-5904.)

EO12196	—	Occupational, Safety and Health Programs for Federal Employees.
EO12958	—	Classified National Security Information.
FM 1-500	—	Army Aviation Maintenance.
Joint Pub 1-02	—	Department of Defense Dictionary of Military and Associated Terms.
TB 750-93-1	—	Functional Grouping Codes: Combat, Tactical, and Support Vehicles and Special Purpose Equipment.
TM 9-1300-206	—	Ammunition and Explosives Standards.
TM 55-1500-328-23	—	Aeronautical Equipment Maintenance Management Policies and Procedures. œ
TM 55-1500-335-23	—	Nondestructive Inspection Methods.

SUPERSEDES PAGE 3 OF MIL-STD-40051A

TM 55-1500-342-23 — Army Aviation Maintenance Engineering Manual, Weight and Balance.

TM 1-1500-204-23 — Aviation Unit Maintenance (AVUM) and Aviation Intermediate Maintenance (AVIM) for General Aircraft Maintenance. (Consists of ten volumes.)

(Copies of these publications are available from the U.S. Army Publications Distribution Center, 1655 Woodston Road, St. Louis, MO 63114-6181.)

2.3 Non-Government publications. The following documents form a part of this document to the extent specified therein. Unless otherwise specified, the issues of the documents which are DoD adopted are those listed in the issue of the DoDISS cited in the solicitation. Unless otherwise specified, the issues of documents not listed in the DoDISS are the issues of the documents cited in the solicitation (6.2).

AMERICAN NATIONAL STANDARDS INSTITUTE (ANSI)

ANSI Y14.15-1966 (R1973) — Electrical and Electronic Diagrams.

ANSI Y32.10 — Diagrams, Fluid Power, Graphic Symbols for.

ISO 8879 — Information Processing - Text and Office Systems - Standard Generalized Markup Language (SGML).

ISO 9000 Series — Quality

(Application for copies should be addressed to the American National Standards Institute Inc., 1430 Broadway, New York, NY 10018-3308.)

AMERICAN SOCIETY OF MECHANICAL ENGINEERS

ASME Y14.38 — Abbreviations and Acronyms

(Application for copies should be addressed to the American Society of Mechanical Engineers, 3 Park Avenue, New York, NY 10016-5990.)

INSTITUTE OF ELECTRICAL AND ELECTRONICS ENGINEERS (IEEE)

IEEE 91-84 — Graphic Symbols for Logic Functions.

IEEE 200-75 — Reference Designators for Electrical and Electronics Parts and Equipments.

IEEE 260-78 — IEEE Standard Letter Symbols for Units of Measurement.

IEEE 280-85	—	Letter Symbols for Use in Electrical Science and Electrical Engineering.
IEEE 315A-86	—	Graphic Symbols for Electrical and Electronic Diagrams.
IEEE 945-84	—	IEEE Recommended Practice for Preferred Metric Units for Use in Electrical and Electronics, Science and Technology.

(Application for copies should be addressed to the Institute of Electrical and Electronics Engineers, Inc., 345 East 47th Street, New York, NY 10017 or the Standardization Documents Order Desk, 700 Robbins Avenue, Building 4D, Philadelphia, PA 19111-5094.)

2.4 Order of precedence. In the event of a conflict between the text of this document and the references cited herein, the text of this document takes precedence. Nothing in this document, however, supersedes applicable laws and regulations unless a specific exemption has been obtained.

3. DEFINITIONS.

3.1 Acronyms used in this standard. The acronyms used in this standard are defined as follows:

AAL	Additional Authorization List
AMC	Army Materiel Command
AMDF	Army Master Data File
ANSI	American National Standards Institute
Ao	Operational Availability
AOAP	Army Oil Analysis Program
AR	Army Regulation
ASCII	American Standard Code for Information Interchange
ASRL	Army SGML registry and Library
ASTM	American Society for Testing and Materials
ATE	Automatic Test Equipment
AVIM	Aviation Intermediate Maintenance
AVUM	Aviation Unit Maintenance
BII	Basic Issue Items
BIT	Built-in Test
BITE	Built-in Test Equipment
BOI	Basis of Issue
CAGEC	Commercial and Government Entity Code
CALS	Continuous Acquisition Life-cycle Support
CCSS	Commodity Command Standard System
CD	Compact Disk
CD-ROM	Compact Disk - Read Only Memory
CGM	Computer Graphics Metafile
COEI	Components of End Item
COMSEC	Communications Security
CPC	Corrosion Prevention and Control
CSI	Critical Safety Items
CTA	Common Table of Allowance
DFARS	Defense Federal Acquisition Regulations
DMWR	Depot Maintenance Work Requirement
DOD	Department of Defense

DODAC	Department of Defense Ammunition Code
DODISS	Department of Defense Index of Specifications and Standards
DS	Direct Support
DTD	Document Type Definition
DX	Direct Exchange
ECM	Electronic Countermeasures
ECP	Engineering Change Proposal
EDS	Electronic Display System
EIC	End Item Code
EIR	Equipment Improvement Recommendation
EMP	Electromagnetic Pulse
ESD	Electrostatic Discharge
FAR	Federal Acquisition Regulations
FDEP	Final Draft Equipment Publication
FGC	Functional Group Code
FOSI	Formatting Output Specification Instance
FRC	Final Reproducible Copy
FSCAP	Flight Safety Critical Aircraft Parts
GL	Grade Level
GS	General Support
GSE	Ground Support Equipment
HCI	Hardness Critical Item
HCP	Hardness Critical Process
HR	Hand Receipt
IEC	Electrotechnical Commission
IEEE	Institute of Electrical and Electronics Engineers
IETM	Interactive Electronic Technical Manual
IGES	Initial Graphics Exchange Specification
ISO	International Organization for Standardization
JTA	Joint Table of Allowances
JTCI	Joint Technical Committee for Information Technology
LAN	Local Area Network
LCN	LSA Control Number
LMI	Logistics Management Information
LOAP	List of Applicable Publications
LOGSA	Logistics Support Activity
LRU	Line Replacement Unit
LSA	Logistics Support Analysis
LSAR	Logistics Support Analysis Record
MAC	Maintenance Allocation Chart
MEL	Maintenance Expenditure Limit
MOC	Maintenance Operational Checks
MOS	Military Occupational Specialty
MTBCM	Meantime Between Corrective Maintenance
MTBF	Meantime Between Failures
MTF	Maintenance Test Flight
MTOE	Modified Table of Organization and Equipment
MTTR	Mean Time to Repair
MUX	Multiplex
MWO	Modification Work Order
NATO	North Atlantic Treaty Organization

NBC	Nuclear, Biological, and Chemical
NDTI	Nondestructive Testing Inspection
NHA	Next Higher Assembly
NIIN	National Item Identification Number
NSN	National Stock Number
ODS	Ozone Depleting Substances
OGL	Overall Grade Level
OIP	Overhaul Inspection Procedures
OIP	Overhaul Inspection Procedure
OS	Output Specification
OSHA	Occupational Safety and Health Act
P/N	Part Number
PCB	Printed Circuit Boards
PI	Parts Information
PMA	Portable Maintenance Aid
PMAC	Preliminary Maintenance Allocation Chart
PMC	Preventive Maintenance Checklist
PMC	Preventive Maintenance Checklist
PMCS	Preventive Maintenance Checks and Services
PMI	Phased Maintenance Inspection
PMS	Preventive Maintenance Services
PSA	Preshop Analysis
QA	Quality Assurance
QTY	Quantity
RAM	Reliability, Availability, Maintainability
RCM	Reliability Centered Maintenance
RGL	Reading Grade Level
RMS	Reliability, Maintainability, and Supportability
RPSTL	Repair Parts and Special Tools List
SB	Supply Bulletin
SC	Supply Catalog
SGML	Standard Generalized Markup Language
SKO	Sets, Kits, and Outfits
SMR	Source, Maintenance, and Recoverability
SRA	Specialized Repair Activity
SRAs	Shop Replacement Assemblies
SRU	Shop Replacement Units
TAMMS	Total Army Maintenance Management System
TAMMS-A	Total Army Maintenance Management System - Aviation
TB	Technical Bulletin
TBO	Time Between Overhaul
TDA	Tables of Distribution and Allowances
TM	Technical Manual
TMDE	Test, Measurement, and Diagnostic Equipment
TOE	Table of Organization and Equipment
U/M	Unit of Measure
UOC	Usable On Code
URL	Uniform Resource Locator
USAPA	U.S. Army Publishing Agency
UUT	Unit Under Test
WP	Work Package

WRAs	Weapons Replacement Assemblies
WTB	Warranty Technical Bulletin

3.2 Acquiring Activity. The DoD component, activity, or organization of a using military service, or that organization delegated by a using service, that is responsible for the selection and determination of requirements for TMs.

3.3 Additional Authorization List (AAL) items. Items are optional (discretionary), are not essential to operate the end item, and are not listed on engineering drawings. Items are not turned in with the end item.

3.4 Adjust. To maintain or regulate within prescribed limits, by bringing into proper position, or by setting the operating characteristics to specified parameters.

3.5 Align. To adjust specified variable elements of an item to bring about optimum or desired performance.

3.6 American National Standards Institute (ANSI). A private sector organization which plans, develops, establishes or coordinates standards, specifications, handbooks or related documents.

3.7 Army Master Data File (AMDF). The files required to record, maintain, and distribute supply management data between and from Army commands to requiring activities.

3.8 Army Oil Analysis Program (AOAP). Effort to detect impending equipment component failure and determine lubricant condition through periodic analytical evaluation of oil samples.

3.9 Assembled item. An item source coded AO, AF, AH, AL, or AD that is not stocked as an assembly but is assembled from its constituent repair parts.

3.10 Assembly. Two or more parts or subassemblies joined together to perform a specific function and capable of disassembly (e.g., brake assembly, fan assembly, audio frequency amplifier).

NOTE

The distinction between an assembly and subassembly is determined by the individual application. An assembly in one instance may be a subassembly in another where it forms a portion of an assembly.

3.11 Auxiliary equipment. Equipment, accessories, or devices which, when used with basic equipment, extend or increase its capability (e.g., Modified Table of Organization and Equipment (MTOE) items, etc.).

3.12 Aviation Intermediate Maintenance (AVIM). The next higher maintenance level after Unit. Aircraft maintenance at this level is the responsibility of, and is performed by, designated maintenance activities for direct support of the using organizations. Its phases normally consist of: calibration, repair, or replacement of damaged or unserviceable parts, components or assemblies; emergency manufacture of non-available parts; and technical assistance to using organizations.

3.13 Aviation Unit Maintenance (AVUM). Aircraft maintenance which is the responsibility of, and is performed by, the using organization on its assigned equipment. Its phases normally consist of inspecting, servicing, lubricating, adjusting, and replacing parts, minor assemblies and subassemblies.

3.14 Basic Issue Items (BII). The minimum essential items not listed in the drawings, but required to place the equipment in operation, to operate it, and to perform emergency repairs. Although shipped separately packaged, basic issue items must be with the equipment during operation and whenever it is transferred between property accounts.

3.15 Basis of Issue (BOI). The quantity of an item (special tool) authorized for the end item density spread or for the unit level specified.

3.16 Block diagram. A modified schematic diagram in which each group of maintenance-significant components that together perform one or more functions is represented by a single symbol or block. The block or symbol representing the group of components shows simplified relevant input and output signals pertinent to the subject diagram.

3.17 Built-in Test Equipment (BITE). Any identifiable device that is a part of the supported end item and is used for testing that supported end item.

3.18 Bulk material. Material issued in bulk for manufacture or fabrication of support items (e.g., sheet metal, pipe tubing, bar stock, or gasket material); excludes expendable items.

3.19 Calibrate. To determine and cause corrections or adjustments to be made to instruments or test, measuring, and diagnostic equipment used in precision measurement. Consists of comparisons of two instruments, one of which is a certified standard of known accuracy, to detect and adjust any discrepancy in the accuracy of the instrument being compared.

3.20 Callout. Anything placed on an illustration to aid in identifying the objects being illustrated, such as index numbers, nomenclature, leader lines, and arrows.

3.21 Continuous Acquisition Life-cycle Support (CALS) raster. Compressed scanned raster images (CCITT, Group 4) in accordance with MIL-PRF-28002.

3.22 Commercial and Government Entity Code (CAGEC). A five character code assigned to commercial activities that manufacture or supply items used by the Federal Government and to Government activities that control design or are responsible for the development of certain specifications, standards, or drawings which control the design of Government items. CAGE Code assignments are listed in the H4/H8 CAGE Publications.

3.23 Commodity Command Standard System (CCSS). A system that standardizes the wholesale logistics operations performed by the major subordinate commands of the U.S. Army Materiel Command in the management of secondary items and repair parts.

3.24 Complete part number. Consists of the CAGEC and part number; used for requisition processing. The CAGEC is entered on a requisition form first, followed by the part number.

3.25 Complete repair. Maintenance capacity, capability, and authority to perform all the corrective maintenance tasks of the repair function in a use or user environment in order to restore serviceability to a failed item. Excludes the prescriptive maintenance functions, overhaul and rebuild.

3.26 Component. A constituent part not normally considered to be capable of independent operation; a piece part.

3.27 Components of End Item (COEI). Items identified on the engineering drawing tree which are physically separated and distinct from the end item.

3.28 Comprehensibility. The completeness with which a user in the target audience understands the information in the TM.

3.29 Continuous Acquisition Life-cycle Support (CALS). A DoD initiative to transition from paper-intensive, non-integrated weapon systems design, manufacturing, and support processes to a highly automated and integrated mode of operation. This transition will be facilitated by acquiring, managing, and using technical data in standardized digital form.

3.30 Computer Graphics Metafile (CGM). A standard digital form for graphics preparation.

3.31 Continuous tone photographs or drawings. Continuous tone photographs or drawings have a continuous gradation of tonal values ranging from light (white) to dark (black), including gray. These tonal values are not created by lines or dots.

3.32 Corrosion Prevention and Control (CPC). Systematic maintenance steps/procedures taken to prevent or retard the gradual destruction and/or pitting of a metal surface or other materials, such as rubber and plastic, due to chemical attack.

3.33 "Current as of" date. Indicates the date that all data in the Repair Parts and Special Tools List (RPSTL) were verified as being current prior to forwarding for printing.

3.34 Degradation. The reduction in systems/subsystems/components performance capability.

3.35 Department of Defense (DoD). The Office of the Secretary of Defense (OSD) (including all boards and councils), the Military Departments (Army, Navy, and Air Force), the Organization of the Joint Chiefs of Staff (OJCS), the Unified and Specified Commands, the National Security Agency (NSA), and the Defense Agencies.

3.36 Department of Defense Ammunition Code (DODAC). An eight character code developed to indicate interchangeability of ammunition and explosive items in Federal Supply Classification (FSC) Group 13. This eight-character code is divided into two parts. The two parts are separated by a hyphen. The first four digits represent the FSC; the letter and last three numerals represent the DoD Identification Code that is assigned to items that are interchangeable in function and use. The eight-character DoD ammunition code is used for such ammunition operations as worldwide stock status reporting and requisitioning when specific items are not required.

3.37 Department of Defense Index of Specifications and Standards (DODISS). The DoD publication that lists unclassified Federal and military specifications and standards, related standardization documents, and voluntary standards approved for use by DoD.

3.38 Depot-level maintenance. Maintenance that is beyond the capability of the unit, direct support, and general support activities. Depot-level maintenance normally consists of overhaul, recondition, manufacture, repair, or modification and requires technical assistance beyond lower maintenance level capability.

3.39 Depot Maintenance Work Requirement (DMWR). A maintenance serviceability document for depot maintenance operations. The document prescribes the essential factors to ensure that an acceptable and cost-effective product is obtained.

3.40 Digital graphics forms. A standard graphics form acceptable for graphics preparation under this standard. These forms include Computer Graphics Metafile (CGM), CALS raster, and Initial Graphics Exchange Specification (IGES).

3.41 Direct support maintenance. Maintenance accomplished on a component, accessory, assembly, subassembly, plug-in unit, or other portion either on the system or after it is removed. The replace function for this level of maintenance is indicated by the letter "F" appearing in the third position of the Source, Maintenance, and Recoverability (SMR) code. An "F" appearing in the fourth position of the SMR code indicates complete repair is possible at the direct support maintenance level.

3.42 Disassemble. The step-by-step taking apart (or breakdown) of a spare or functional group-coded item to the level of its least componency identified as maintenance-significant (i.e., assigned an SMR code for the category of maintenance under consideration).

3.43 Document instance. The instance is the actual document text and its accompanying SGML tags conforming to the specifications and restrictions set forth in the DTD.

3.44 Document Type Definition (DTD). The definition of the markup rules for a given class of documents. A DTD or reference to one should be contained in any SGML conforming document.

3.45 Electronic Countermeasures (ECM). Electronic surveillance equipment for detecting and adverting threatening enemy weapons systems.

3.46 Electronic Manual (EM) Number. A chronologically numbered 4-digit number (assigned by USAPA), utilizing zeros when necessary to maintain four digits, following the letters “EM” (as in EM 0001, EM 0002, EM 0003). The EM number functions as the CD nomenclature assigned to an ETM/IETM comprised of one or more CDs (i.e., the same EM number applies to all CDs distributed as a set if the series and size of related equipment/WS manuals dictate use of more than one CD).

3.47 Electrostatic Discharge (ESD). Static electricity. A transfer of electrostatic charge between objects of different potentials caused by direct contact or induced by an electrostatic field. Devices such as integrated circuits and discrete devices (e.g., resistors, transistors, and other semiconductor devices) are susceptible to damage from electrostatic discharge.

3.48 End Item Code (EIC). A final combination of end products, component parts, or materials that is ready for its intended use (e.g., tank, mobile machine shop, aircraft, receiver, rifle, recorder).

3.49 Equipment. One or more units capable of performing specified functions.

3.50 Equipment Improvement Recommendation (EIR). Solicitation of suggestions from end item users/operators for means to improve the operation and effectiveness of equipment. The SF 368 is the instrument by which suggested improvements are forwarded to the cognizant agency.

3.51 Equipment nomenclature. The publication number shown on the cover of each publication; e.g., TM 1-1520-238-10, or on the label of a CD-ROM; e.g., EM 0010 or TM 1-1520-LONGBOW/APACHE.

3.52 Essential. Those systems/subsystems/components that are required for a designated mission or system operation.

3.53 Evacuation. A combat service support function which involves the movement of recovered material from a main supply route; maintenance collection material may be returned to the user, to the supply system for reissue, or to property disposal activities.

3.54 Expendable items. Items, other than repair parts, that are consumed in use (e.g., paint, lubricants, wiping rags, tape, cleaning compounds, sandpaper).

3.55 Final Reproducible Copy (FRC). The final document ready for reproduction and publication as an authenticated TM, including all necessary changes made as a result of validation/verification and acquisition activity conditions of acceptance or approval. The delivery media includes, but is not limited to, reproducible camera-ready copy, direct image copies, negatives, disks, tapes, etc., as specified. For Army, FRC equates to Final Draft Equipment Publication (FDEP).

3.56 Flight safety hazard. An existing or potential condition that can result in a flight mishap.

3.57 Footer. One or more lines of standard text that appear at the bottom of each page (also called feet and running feet).

3.58 Formatting Output Specification Instance (FOSI). A FOSI specifies the style and formatting requirements of a particular class of documents using the Output Specification (OS). The FOSI can include font, leading, hyphenation characteristics, etc.

3.59 Frame-based technical manual. The format and style of the presented information are optimized for window presentation to assure maximum comprehension. The presentation format is “frame-oriented”, and not “page-oriented”.

3.60 Functional diagram. A type of illustration in which symbols are connected by lines to show relationships among the symbols. The symbols may be rectangles or other shapes, standard electronic symbols representing components or functions, or pictorials representing equipment or components. Where appropriate, voltage readings are shown. The lines may represent procedures or processes, such as signal or logic flow, and physical items, such as wires. Functional diagram includes schematics, wiring and piping diagrams, logic diagrams, flow charts, and block diagrams.

3.61 Functional Group Code (FGC). A basic (usually two-position) group code assigned to identify major components, assemblies, and subassemblies to a functional system. Subordinate subfunctional groups/subassemblies are coded to relate back to the basic (top position) FGC in a sequential, Next Higher Assembly (NHA) relationship (i.e., top-down breakdown structure).

3.62 General support maintenance (GS). Maintenance accomplished on a component, accessory, assembly, subassembly, plug-in unit, or other portion either on the system or after it is removed. The replace function for this level of maintenance is indicated by the letter "H" appearing in the third position of the SMR code. An "H" appearing in the fourth position of the SMR code indicates complete repair is possible at the general support maintenance level.

3.63 Grade Level (GL). Level of reading comprehensibility to which a document is written. The required reading grade level of a document is specified by the acquiring activity. For example a level of about ninth grade may be required for materials of a technical nature to be included in maintenance manuals.

3.64 Graphic(s). Any type of presentation or representation which gives a clear visual impression.

3.65 Hardness Critical Item (HCI). A support item that provides the equipment with speacial protection from electromagnetic pulse (EMP) damage during a nuclear attack.

3.66 Hardness Critical Process (HCP). A process affecting a mission critical item which could degrade system survivability in a nuclear, biological, or chemical hostile environment if hardness were not considered. Nuclear HCPs are processes, finishes, specifications, manufacturing techniques, and/or procedures which are hardness critical, and which, if changed, could degrade nuclear hardness.

3.67 Hardtime scheduled maintenance. Hardtime maintenance is scheduled maintenance conducted at predetermined fixed intervals because of age, calendar, or usage such as operating time, flying hours, miles driven, or rounds fired.

3.68 Header. One or more lines of standard text that appear at the top of each page (also called heads and running heads).

3.69 Horizontal (Landscape) TM format. Positioning of technical manual so that page horizontal (width) dimensions are greater than vertical (height) dimensions.

3.70 Icon. Pictorial representation; visual image to give immediate recognition of a hazard or to provide essential information.

3.71 Initial Distribution Number (IDN). A specific six-digit number (assigned by USAPA) to each publication, which can be found in DA Pam 25-30, and is required for account holders to establish subscription requirements based on need. This established requirement permits the account holder to automatically receive changes or revisions to those publications when they are printed and distributed through the initial distribution system.

3.72 Illustration. A general term meaning graphic presentations of all types. Illustrations include pictorials, functional diagrams, and line graphs. This term is used instead of such terms as figure, graphic, drawing, diagram, and artwork.

3.73 Initial Graphics Exchange Specification (IGES). A standard digital form for graphics preparation. Defined by MIL-PRF-28000.

3.74 Inspect. To determine the serviceability of an item by comparing its physical, mechanical, and/or electrical characteristics with established standards through examination (e.g., by sight, sound, or feel).

3.75 Institute of Electrical and Electronics Engineers (IEEE). Membership organization that includes engineers, scientists and students in electronics and allied fields. Founded in 1963, it has over 300,000 members and is involved with setting standards for computers and communications.

3.76 Interactive Electronic Technical Manual (IETM). A technical manual prepared in digital form and designed for interactive display to the maintenance technicians or system operator end users by means of a computer controlled Electronic Display System (EDS).

3.77 International Organization for Standardization (ISO). Organization that sets international standards, founded in 1946 and headquartered in Geneva. It deals with all fields except electrical and electronics, which is governed by the older International Electrotechnical Commission (IEC), also in Geneva. With regard to information processing, ISO and IEC created JTCI, the Joint Technical Committee for information technology.

3.78 Interchangeability. Defined in this specification as above, the scope of classic interchangeability. The intent/purpose of this specification is to allow fully innovative fixes/repairs to the aircraft. This includes minor modifications that can be made to achieve interchangeability. Capable of being put or used in place of each other.

3.79 Landscape mode. To print an image sideways on the page so that the longest edge of the form corresponds to the horizontal axis.

3.80 Leak rate. The speed or rate of flow of accidental escape of fluid or gas from a system which is caused by damage processes. The leak rate is influenced by such factors as the hole size, internal/external pressures, and fluid level.

3.81 Legend. A tabular listing and explanation of the numbers or symbols on a figure or an illustration.

3.82 Limited repair. Scope of corrective repair authorized to be performed by a level of maintenance lower than the level of authorized complete repair.

3.83 Line Replacement Unit (LRU). An item normally removed and replaced as a single unit to correct a deficiency or malfunction on a weapon system or end item of equipment.

3.84 List of Applicable Publications (LOAP). A listing of publications which are applicable to a piece of equipment or a group of equipment.

3.85 Logic tree. Diagram comprised of a branching series of questions, resulting in a “yes” or “no” answer, leading to determination and resolution of problem.

3.86 Logistics Support Analysis (LSA). The selective application of scientific and engineering efforts undertaken during the acquisition process, as part of the systems engineering process, to assist in acquiring the required support, and providing the required support during the operational phase at minimum cost.

3.87 Maintenance Allocation Chart (MAC). A list of equipment maintenance functions showing maintenance level. The MAC is arranged in functional group code sequence or in top-down, breakdown sequence in the logical order of disassembly following the RPSTL order of assembly/subassembly listings.

3.88 Maintenance level. The separation of maintenance activities or functions in the U.S. Army according to the required skills and available facilities.

3.89 Maintenance task. A series of related maintenance procedures with a definite beginning and end.

3.90 Maximum Time to Repair (MTTR). The total elapsed time (clock hours) for corrective maintenance divided by the total number of corrective maintenance actions during a given period of time.

3.91 Mean time between corrective maintenance (MTBCM). For a particular interval, the total functional life of a population of an item divided by the total number of failures within the population during the measurement interval. The definition holds for time, rounds, miles, events, or other measure of life units. (Used only when referring to depot level maintenance.)

3.92 Meantime between failures (MTBF). For a particular interval, the total functional life of a population of an item divided by the total number of failures within the population during the measurement interval. The definition holds for time, rounds, miles, events, or other measure of life units.

3.93 Modified able of organization and equipment (MTOE). A modified version of a TOE that prescribes the unit organization, personnel, and equipment needed to perform an assigned mission in a specific geographical or operational environment.

3.94 Modification work order (MWO). Detailed instructions (including text and graphics) for making changes/improvements to a particular system in order to bring the system up to date and/or to improve its overall efficiency.

3.95 Module. A subassembly that, in the area of electronic systems, may be removed and replaced without use of soldering equipment or special tools; a module may be encapsulated.

3.96 National Item Identification Number (NIIN). The last nine digits of the National/NATO stock number. The first two digits of the NIIN identify the country assigning the number and the remaining seven digits are a serially assigned number.

3.97 National Stock Number (NSN). 13-digit number assigned to a repair part to be used for requisitioning purposes.

3.98 Next Higher Assembly (NHA). Assembly or subassembly of which subject component(s) or subassembly are a subpart.

3.99 Nomenclature. The approved name or alphanumeric identifier assigned to an item, equipment, or component in agreement with an organized designation system.

3.100 Nondestructive Testing Inspection (NDTI). Testing of a nature which does not impair the useability of the item.

3.101 Nuclear, Biological, and Chemical (NBC). Reference to decontamination procedures performed on equipment and/or personnel exposed to nuclear, biological, and chemical weapons.

3.102 On-condition maintenance. Maintenance performed or an item replacement action performed based upon condition of the item as determined by an evaluation of each item on a scheduled basis.

3.103 Operator maintenance. Consists of inspecting, servicing, lubricating, adjusting, replacing, and repairing those items authorized by Logistic Support Analysis (LSA) and/or Maintenance Allocation Chart (MAC).

3.104 Orphan. Last line of a paragraph pushed to a new page, stranded alone (orphaned) at the top of the page without the rest of its paragraph.

3.105 Overall Grade Level (OGL). Computed average reading comprehensibility of specified number of document text samples.

3.106 Overhaul. That maintenance effort (service/action) prescribed to restore an item to a completely serviceable/operational condition as required by maintenance standards in appropriate technical publications. Overhaul does not normally return an item to like new condition.

3.107 Overhaul Inspection Procedure (OIP). Routine maintenance inspection conducted just prior to period specified for removal of aircraft for overhaul or retirement.

3.108 Page-based technical manual. A technical manual consisting of text, illustrations and tabular data presented in a standard page-oriented format.

3.109 Part Number (P/N). A primary number used to identify an item used by the manufacturer (individual, company, firm, corporation, or Government activity) that controls the design, characteristics, and production of the item by means of its engineering drawings, specifications, and inspection requirements.

3.110 Phased maintenance inspection (aircraft). A thorough and searching examination of the aircraft and associated equipment. Removal of access plates, panels, screens, and some partial disassembly of the aircraft is required to complete the inspection. Inspections are due after an appointed number of flying hours since new or from the completion of the last inspection.

3.111 Pictorial. A type of illustration showing the physical appearance of equipment or component parts. This term is used instead of such general terms as illustration, drawing, and diagram.

3.112 Portrait mode. To print an image the regular way so that the longest edge of the form corresponds to the vertical axis.

3.113 Pre-screening. A process in which a clear material with a dot pattern or crossing opaque lines is used through which an image is photographed in making a halftone.

3.114 Preshop analysis. To determine, prior to beginning maintenance activities, the extent of maintenance required to return the end item, assembly, subassembly, or component to a serviceable condition as specified by the depot level maintenance instructions.

3.115 Preventive maintenance (scheduled maintenance). The performance of scheduled inspections and maintenance functions necessary to keep the equipment in serviceable condition and ready for its primary mission.

3.116 Preventive Maintenance Checklist (PMC). A listing of all before, during, and after operation preventive maintenance checks, including tactical and safety checks, that the operator or crew performs to ensure that the equipment is mission capable and in good operating condition.

3.117 Preventive maintenance daily (aircraft). Inspection of aircraft and associated equipment after the last flight of the mission day or before the first flight of the next day. Some operational checks and removal of screens, panels, and inspection plates may be required to accomplish the inspection.

3.118 Preventive maintenance services inspection (aircraft). Special recurring inspection of aircraft and associated equipment after an appointed number of flying hours or days whichever occurs first (e.g. 10 flying hours or 14 days). Some operational checks and removal of screens, panels and inspection plates may be required to accomplish the inspection.

3.119 Preventive Maintenance Checks and Services (PMCS). Periodic inspection and maintenance at scheduled intervals to ensure that the equipment and its components remain mission capable and in good operating condition. In aircraft, checks are required of mandatory safety-of-flight items. Lubrication is part of PMCS.

3.120 Proponent. An Army organization or staff which has been assigned primary responsibility for material or subject matter in its area of interest.

3.121 Publication Identification Number (PIN). A number (assigned by USAPA to each publication) that can be found in DA Pam 25-30 and is comprised of 6 numerals and a 3-digit “change number” field that permits ordering a specific change to the publication (as in 001 for change 1, 023 for change 23).

3.122 Quality Assurance (QA). A planned and systematic pattern of all actions necessary to provide adequate confidence that the item or product conforms to established technical requirements.

3.123 Reading Grade Level (RGL). A measurement of reading difficulty of text related to grade levels (such as ninth grade level, fourteenth grade level, etc.).

3.124 Rebuild. Consists of those services/actions necessary for the restoration of unserviceable equipment to a like new condition in accordance with original manufacturing tolerances.

3.125 Reference designator. Letters or numbers, or both, used to identify and locate discreet units, portions thereof, and basic parts of a specific equipment, assembly, or subassembly.

3.126 Reliability, Maintainability and Supportability (RMS) and Operational Availability (Ao). Requirements imposed on materiel systems to ensure that they are operationally ready for use when needed, will successfully perform assigned functions, and can be economically operated and maintained within the scope of logistic concepts and policies.

3.127 Reliability Centered Maintenance (RCM). A systematic approach for identifying preventive maintenance tasks for an equipment end item in accordance with a specified set of procedures and for establishing intervals between maintenance tasks.

3.128 Remove/install. To remove and install the same item when required to perform service or other maintenance functions. Install may be the act of emplacing, seating, or fixing into position a spare, repair part, or module (component or assembly) in a manner to allow the proper functioning of an equipment or system.

3.129 Repair. The application of maintenance services (inspect, test, service, adjust, align, calibrate, and/or replace), including fault location/troubleshooting, removal/installation, and disassembly/assembly procedures, and maintenance actions to identify troubles and restore serviceability to an item by correcting specific damage, fault, malfunction, or failure in a part, subassembly, module (component or assembly), end item, or system. Repair is authorized by the LSA/MAC and the assigned maintenance level is shown as the fourth position code of the SMR code.

3.130 Repair part. Those support items that are an integral part of the end item or weapons system which are coded as not repairable (i.e., consumable items).

3.131 Repair Parts and Special Tools List (RPSTL). The technical document which contains an introduction, list of repair parts, list of special tools, NSN index, part number index, and reference designator index for a specified equipment item.

3.132 Replace. To remove an unserviceable spare or repair part and install a serviceable counterpart in its place. Replace is authorized by the LSA/MAC and the assigned maintenance level is shown as the third position code of the SMR code.

3.133 Revision. A revision is comprised of corrected, updated or additional pages or work packages to the current edition of a manual. It consists of replacement work packages that contain new or updated technical information, or improves, clarifies or corrects existing information in the current edition of the manual.

3.134 Schematic diagram. A graphic representation showing the interrelationship of each component or group of components in the system/equipment. The essential characteristic of these diagrams is that every maintenance-significant functional component is separately represented. Also, where appropriate, voltage readings should be shown.

3.135 Service. Operations required periodically to keep an item operating, i.e., to clean (includes decontaminate, when required), to preserve, to drain, to paint, or to replenish fuel, lubricants, chemical fluids, or gases.

3.136 Set. A unit and necessary assemblies, subassemblies, and parts connected together or used in association to perform an operational function (e.g., radio receiving set, measuring set, radar, or homing set which includes parts, assemblies, and units such as cables, microphones, and measuring instruments).

3.137 Source, Maintenance, and Recoverability (SMR) code. The five-position code containing supply/requisitioning information, maintenance level authorization criteria, and disposition instruction. The first two positions of the SMR code determine how to get an item. The third position represents who can install, replace, or use the item. The fourth position dictates who can do complete repair on the item. The fifth position represents who determines disposition action on unserviceable items.

3.138 Spare part. Those support items that are an integral part of the end item or weapons system that are coded as repairable (i.e. reparable items). Spares include those equipments authorized by TOE line item plus equipments, assemblies, and modules designated as operational readiness float. TOE training equipment is excluded.

3.139 Special tools. Those tools that have single or peculiar application to a specific end item/system.

3.140 Specialized Repair Activity (SRA). A level of maintenance usually characterized by the capability to perform maintenance functions requiring specialized skills, disciplined quality control, highly sophisticated and expensive special tools, and TMDE. Its phases normally consist of adjustments, calibration, alignment, testing, troubleshooting, assembly, disassembly, fault isolation, and repair of unserviceable parts, modules, and printed circuit boards (PCB).

3.141 Standard Generalized Markup Language (SGML). A language for document representation that formalizes markup and frees it of system and processing dependencies.

3.142 Standard Generalized Markup Language (SGML) declaration . Defines which characters are used in a document instance, in which syntax the DTD is written, which SGML features are used, etc.

3.143 Subassembly. Two or more parts that form a portion of an assembly or a component replaceable as a whole, but having a part or parts that are individually replaceable (e.g., gun mount stand, window recoil mechanism, floating piston, intermediate frequency strip, mounting board with mounted parts).

3.144 Supply Catalog (SC). The DA publication which is the configuration control document that provides the user identification of Sets, Kits and Outfits (SKO) and its components. It also provides user supply management data and is an accountability aid.

3.145 System. A group of items united or regulated by interaction or interdependence to accomplish a set of specific functions.

3.146 Tags. Descriptive markup, as in a start-tag and end-tag.

3.147 Tailoring. The process of evaluating individual potential requirements to determine their pertinence and cost effectiveness. The tailoring of data requirements is limited to the exclusion of information requirement provisions and selecting or specifying applicable requirements.

3.148 Task. A sequence of user actions with a beginning and an end. User tasks relate to installation, checkout, operation, and maintenance of systems or equipment.

3.149 Technical Manuals (TM). Manuals that contain instructions for the installation, operation, maintenance, and support of weapon systems, weapon system components, and support equipment. TM information may be presented, according to prior agreement between the contractor and the Government, in any form or characteristic, including hard printed copy, audio and visual displays, electronic imbedded media, disks, other electronic devices, or other media. They normally include operational and maintenance instructions, parts lists, and related technical information or procedures exclusive of administrative procedures.

3.150 Test. To verify serviceability by measuring the mechanical, pneumatic, hydraulic, electrical or electronic characteristics of an item and comparing those characteristics with prescribed standards.

3.151 Test, Measurement, and Diagnostic Equipment (TMDE). Any system or device used to evaluate the operational condition of an end item or subsystem thereof, or to identify and/or isolate any actual or potential malfunction. TMDE includes diagnostic and prognostic equipment, semiautomatic and automatic test equipment (with issued software), and calibration test or measurement equipment.

3.152 Time Between Overhaul (TBO) items. Those items having a definite retirement schedule within a defined overhaul interval, e.g., those items which must be replaced within a system assembly, subassembly, or component between scheduled overhauls.

3.153 Title Block Page. The first page after the warning summary in the front matter portion of a TM. It identifies the TM by publication number, date, title and NSN/part number/model of equipment covered in the manual.

3.154 Top-down generation breakdown. The pyramidal breakdown of an end item, with the top item being the complete end item. The process of breakdown is established from the engineering drawing structure in an NHA progression until the lowest reparable in each family tree group is identified. All nonreparables (spare parts) can be identified in like manner to establish their NHA relationships.

3.155 Unit maintenance. The responsibility of a using organization to perform maintenance on its assigned equipment. It normally consists of inspecting, servicing, lubricating, adjusting, and replacing parts, minor assemblies, and subassemblies. The replace function for this level of maintenance is indicated by the letter "O" in the third position of the SMR code. An "O" appearing in the fourth position of the SMR code indicates complete repair is possible at the unit maintenance level.

3.156 Usable on code (UOC). A three-position alphanumeric code representing the applicable configuration in which an item is used. When an item is used on all configurations or when only one configuration is covered by the RPSTL, UOCs should not be shown.

3.157 User. A person using the technical manual.

3.158 Wiring diagram. Diagram illustrating signal flow or wiring connections. Where appropriate, voltage readings should be shown.

3.159 Work packages (WP). Presentation of information functionally divided into individual task packages in the logical order of work sequence. These WPs should be stand alone general information, description, theory, operating, maintenance, troubleshooting, parts, and supporting information units containing all information required for directing task performance.

REPRINTED WITHOUT CHANGE

4. GENERAL REQUIREMENTS.

4.1 General. Technical content requirements for the preparation and delivery of all technical manuals and revisions covering operation and maintenance, at all levels of maintenance through overhaul (depot), including Depot Maintenance Work Requirements (DMWRs) are provided in MIL-STD-40051-1A through MIL-STD-40051-6A.

4.2 Types of technical manuals. Appendix A, Technical Manual Content Selection Matrixes, lists specific technical content requirements for each type of maintenance manual, including multilevel TMs, covered by this standard. Each type of TM shall provide in detail the maintenance coverage prescribed for the applicable maintenance level(s) by the Maintenance Allocation Chart (MAC) and SMR-coded items.

4.3 Selective application and tailoring. MIL-STD-40051A contains some requirements that may not be applicable to the preparation of all technical manuals. Selective application and tailoring of requirements contained in MIL-STD-40051A are the responsibility of the acquiring activity and shall be accomplished through the use of the matrixes provided in Appendix A. The applicability of some requirements is also designated by one of the following statements: unless specified otherwise by the acquiring activity; as/when specified by the acquiring activity; or when specified by the acquiring or proponent activity.

4.4 Preparation of digital data for electronic delivery. Technical manual data prepared and delivered digitally in accordance with this standard shall be Standard Generalized Markup Language (SGML) tagged using the Document Type Definitions (DTDs) and the Formatting Output Specification Instance (FOSI) or style sheets in accordance with MIL-STD-2361. Refer to 4.6 for information on obtaining or accessing the DTDs and FOSIs.

4.5 Use of the DTDs/FOSIs.

4.5.1 Page-based TMs. The DTDs referenced in this standard interpret the technical content and structure for the functional requirements contained in this standard and are mandatory for use. The FOSIs referenced herein interpret the style and format. As specified by the contracting activity, FOSIs or style sheets may be used to produce final reproducible paper copy for all TMs prepared in accordance with this standard. For additional information on DTDs and specific FOSIs, refer to MIL-STD-2361.

4.5.2 Frame-based TMs. The DTDs referenced in this standard interpret the technical content and structure for the functional requirements contained in this standard and are mandatory for use. Development of frame-based TMs is accomplished through the use of the DTDs combined with the requirements contained in MIL-PRF-87268. The requirements contained in MIL-PRF-87268 apply unless they conflict with the requirements in this standard. The requirements in this standard take precedence over the requirements contained in MIL-PRF-87268. A FOSI or style sheet is used to interpret the style and format for frame-based screen display. For additional information on DTDs and specific FOSIs or style sheets, refer to MIL-STD-2361.

4.6 Obtaining the DTDs/FOSIs. The DTDs, FOSIs and associated tag and attribute descriptions, which are SGML constructs, may be obtained from the Army SGML Registry and Library (ASRL). The ASRL assets may be obtained using the methods described in MIL-STD-2361 as follows:

a. World Wide Web (WWW): ASRL homepage Uniform Resource Locator (URL) http://www.asrl.com/

SUPERSEDES PAGE 20 OF MIL-STD-40051A

b. U.S. Mail: Requested files will be mailed on 3.5" DOS formatted diskettes or on 1/4" UNIX tar formatted tape. Requests may be submitted as follows:

Written request:
Director, USAPA-U.S. Army Publishing Agency
ATTN: JDHQSV-PAP-DS
2461 Eisenhower Avenue
Alexandria, VA 22331

Telephone Request:
Commercial: (703) 428-0508 or 0504
DSN: 328-0508 or 0504

4.7 Style and format. Style and format requirements for the technical content contained in page-based TMs are provided in 4.8. Style and format requirements for the technical content contained in frame-based TMs are provided in 4.9.

4.8 Style and format requirements for technical content of page-based TMs.

4.8.1 Examples of style and format. The examples provided at the rear of this standard are an accurate interpretation of the technical content, style and format requirements contained herein and shall be followed to ensure that the conforming Document Type Definitions (DTDs) can be used to develop digital data in accordance with MIL-STD-2361.

4.8.2 TM divisions. The hierarchical breakdown of a TM is: volumes (if required), chapters, and work packages (WPs), paragraphs, subparagraphs, and steps. Each division used should have at least two occurrences (for example where there is a Volume 1, there should be a Volume 2; where there is a Chapter 1, there should be a Chapter 2; etc.). Multiple volumes should be partitioned only between chapters.

4.8.2.1 Volume size and content.

a. Division into volumes shall occur when the number of printed pages (excluding pocket TMs) exceeds 1,500 pages or 750 sheets. Each volume shall not exceed 1,500 pages or 750 sheets. A pocket TM (4 by 5-1/2 by 4 inches) or a pocket TM volume shall not exceed 200 pages or 100 sheets.

b. There shall be no page limitations for TMs prepared solely for digital display.

c. Each volume of a series shall display the TM number on its cover and all pages that make up the volume. Each volume of a series shall contain a title block page and table of contents.

d. Separate volumes shall not be used to distinguish between models of equipment (e.g., -10 for basic model, -10-1 for model A, -10-2 for model B, etc.).

4.8.2.2 Chapters. Chapters shall be used to divide TM data into specific functional information. Chapter types include General Information, Operating Instructions, Troubleshooting Information, Maintenance Information, Parts Information and Supporting Information. Each chapter shall be made up of one or more work packages.

4.8.2.3 Work packages. Work packages shall be used to logically divide TM data into functional descriptive or task-oriented information. Work packages shall begin on a right-hand page. Refer to figure 1 for an example of a typical work package.

4.8.2.3.1 Work package size. To facilitate useability or the revision process, work packages should not exceed 30 pages. A series of maintenance tasks can be divided into two or more work packages unless it is determined that separating the task information would degrade useability (i.e., removal and installation of the gun turret in one work package, disassembly and reassembly of the gun turret in a second work package).

4.8.2.3.2 Work package content. Work packages (figure 1) may contain a title block, initial setups, descriptive information, operating tasks, and maintenance tasks. These data types can be further divided into paragraphs, procedural steps, tables, lists, warnings, cautions and notes, and supporting illustrations. Refer to MIL-STD-40051-1A through MIL-STD-40051-6A for the specific content requirements for each of the functional work package types (i.e., description information, operator's instructions, maintenance, troubleshooting, repair parts, and supporting information).

4.8.2.3.3 Development of individual work packages. Ideally, each WP in a manual will be an independent, stand alone data unit. It may be required to group some information or maintenance tasks in one work package and divide others into several WPs of suitable length. Typical examples of page-based technical content work packages required in MIL-STD-40051-1A through MIL-STD-40051-6A are provided in MIL- HDBK-1222. Division or selection of coverage will depend on various factors. These factors may include but are not limited to:

a. A specific work package that is required by this standard.

b. A specific work package that is required by the TM content selection matrix provided by the contract activity.

c. A WP may be determined by the operational modes, complexity of the maintenance action, or level(s) of maintenance covered. Separate maintenance WPs may be developed for the same equipment or component for different maintenance levels (e.g., a WP for operator’s maintenance and a WP for direct support maintenance for the same item of equipment).

d. Two or more WPs for an identical maintenance task may be required because the task is performed differently due to differences in configurations.

e. More than one WP may be required because the size of the work package will exceed 30 pages. It is permissible to divide a set of maintenance tasks for a specific system, equipment or component into two or more WPs to comply with the page size limitation. (e.g., removal and installation procedures could be placed in one WP and disassembly, cleaning, repair, and reassembly could be placed in a second WP).

f. Development of more than one WP because the reduction in the size of the work package would make it more usable.

g. Confining the information to one WP because dividing the information into several work packages would degrade the usability.

h. Separate WPs due to different initial setup information for a set of maintenance tasks for a repairable component. If the support equipment, tools, materials and personnel used to perform removal and installation is very different than the support equipment, tools, materials and personnel used to perform disassembly and reassembly for the same system or component, it may be better to separate this information into two WPs.

4.8.3 Type size and style. Type style, size, and spacing shall be in accordance with best commercial practices for technical publications. Type shall be proportionally spaced (non mono spaced). Fonts shall be selected for a balance between readability and economy of space. Setting text in all capital letters shall be limited to appropriate uses, such as major headings, acronyms, and equipment markings.

4.8.4 Page size and orientation. The TM shall be prepared in a size selected from table I and specified by the acquiring activity. Placement of margins, headers, and footers shall be in accordance with best commercial practices. Orientation of pages, either vertical (portrait) or horizontal (landscape), shall be consistent throughout a given manual for ease of use. The growing prevalence of TMs used in electronic display mode (instead of paper) makes this consistency extremely important. Exceptions may be made only if essential for proper grouping of information for the user's benefit. Otherwise, information shall be formatted or reformatted so that all pages have the same orientation.

TABLE I. Manual styles and trim sizes.

Style	Trim Size	Orientation
Pocket	4 x 5.5 5.5 x 4	Vertical Horizontal
Logbook	6.5 x 9.5 9.5 x 6.5	Vertical Horizontal
Standard	8.5 x 11 11 x 8.5	Vertical Horizontal
Double Standard	17 x 11	Horizontal

4.8.5 Foldout pages.

a. Foldout pages, if needed, shall be the same height as regular pages in the manual, and shall be folded 2, 4, or 6 times, depending on the width necessary. Each foldout shall have a blank apron wide enough for the user to look at the data while reading text elsewhere in the TM. Foldouts shall not be used in repair parts and special tools lists (RPSTL) or operator-only TMs.

b. Work packages shall not contain foldouts. Foldout pages shall follow the last work package, the glossary, or the alphabetical index, whichever forms the last portion of the TM or volume.

4.8.6 Final reproducible copy (FRC). FRC shall be a direct output of the contractor's digital TM files. The master copy of any TM is a set of digital files, not the hard-copy results. There are no peculiar layout requirements for FRC distinct from those for non-final drafts or proofs. The only special criterion for FRC is reproducibility: Its resolution and contrast must be sufficient for creation of offset plates or raster page images without loss of detail that would be noticeable to users.

4.8.7 Warnings, cautions, and notes.

4.8.7.1 Use and placement.

a. A warning shall precede the text of any procedure involving a clear danger to the person doing that procedure. A caution shall precede the text of any procedure involving a clear risk of damage to the equipment. A note, used to highlight essential procedures, conditions, or statements may either precede or follow the text. If multiple warnings, cautions, or notes apply to the same text, the warnings shall appear first, cautions second, notes last.

b. The header **WARNING**, **CAUTION**, or **NOTE** shall be bold and centered above the appropriate text. Headers shall not be numbered. When a warning, caution, or note consists of two or more paragraphs, the header **WARNING**, **CAUTION**, or **NOTE** shall not be repeated above each paragraph. Warnings, cautions and notes on unrelated topics may not be contained under one heading.

c. Bulleted lists are not allowed in warning, cautions, or notes.

d. Layout shall not result in warnings, cautions, and notes divided so first lines of text or groups of icons appear on one page and remaining lines or groups of icons on another.

e. Layout shall avoid warnings, cautions, and notes being placed on a different page than the paragraph to which they apply.

4.8.7.2 Icons. Use of standardized icons to improve readers' recognition of hazards is encouraged. Approved icons for use in technical manual warnings are contained in figure 2 and 3. Warning icons used shall be defined in the warning summary.

4.8.7.2.1 Development of icons. Icons are enclosed in a square or rectangular box (Refer to figures 2 and 3). The signal word(s) for icons appear outside the box placed to the right or below the icon(s).

4.8.7.2.2 Safety warnings with icons. The safety warning icons provided in figure 2 can be used in conjunction with the **WARNING** or **CAUTION** header and description of the hazard. For additional information on the use and placement of warnings and icons refer to MIL-HDBK-1222.

4.8.7.2.3 Hazardous materials warnings with icons. Procedures prescribed for the operation and maintenance of equipment shall be consistent with the safety standards established by the Occupational Safety and Health Act (OSHA) Public Law 91-596 and Executive Order 12196. When exposure to hazardous chemicals or other adverse healths factors or use of equipment cannot be eliminated, guidance pertaining to the exposure shall be included in the TM. A list of personnel protective devices should also be included. Hazardous materials warnings may be presented in the standard warning format without an icon (as described above in 4.8.7.1 a and b, or in conjunction with an icon, or a combination of icons. The acquiring activity must approve the use of icons other than those presented in figure 3. Hazards that result from a combination of materials must clearly be identified to indicate that mixing or combining the materials creates the hazard.

4.8.7.2.3.1 Format for hazardous materials warnings with icons. Hazardous materials warnings with icons consist of a heading (WARNING), the icon(s), and a full description of the hazardous material and the precautions to be taken. They immediately precede the text to which they apply. For commonly used substances only (e.g. dry cleaning solvent, hydraulic fluids, paints, etc.), an abbreviated format may be used for hazardous materials warnings. The abbreviated format consists of the heading (WARNING), the icon(s), and the nomenclature (signal word(s)) of the hazardous material. In this case the full description of the warning is placed in the warning summary at the front of the TM. Icons may be used in technical manuals warnings either singly or in combination. When icons are used in combination, the placement and format should adhere to the methods provided in MIL-HDBK-1222.

4.8.8 Chapters.

4.8.8.1 Chapter title page <**titlepg**>. Each chapter shall begin with a chapter title page. See figure 4 for an example of a chapter title page. A chapter title page shall always be a right-hand page. A separate chapter title page is not required for pocket size manuals. For pocket manuals, the chapter number and title may be placed on the top of the first page of the first work package of the chapter.

4.8.8.2 Chapter numbering. Chapters shall be numbered in sequential order throughout the TM using Arabic numerals. Chapters shall not be renumbered in separate volumes.

4.8.9 Work packages.

4.8.9.1 Work package title block. All work packages shall have a title block (Refer to figure 1). The title block shall consist of the work package identification information described in MIL-STD-40051-1A through MIL-STD-40051-6A, as applicable.

4.8.9.2 Work package sequential numbering. To maintain a sequential order in the TM and to facilitate referencing, each work package (WP) shall be assigned a six digit number beginning with the number 0001 00. There shall be one blank space between the forth and fifth numerals. The work package sequence numbers shall run consecutively throughout the TM. For example, the first work package in Chapter 2 will be assigned the number immediately following the last work package number in Chapter 1 (e.g., if 0010 00 is the last WP in Chapter 1, 0011 00 will be the first work package in Chapter 2). WP sequence numbers shall be assigned in numerical sequence, initially by the first four digits, then by the last two digits. (Refer to figure 1).

4.8.9.2.1 Assignment of the last two digits of the work package sequence number. The last two digits of the WP sequence number shall be reserved to permit unlimited expansion of the TM to incorporate new configuration data without affecting the WP sequence numbers already assigned, and to permit adding one or more WPs between any two existing WPs during any revision cycle. The placement within the TM shall depend on the technical content task arrangement and its relationship to the existing WP and the WP(s) to be added. During any revision cycle, the first WP sequence number to be assigned after an existing basic WP sequence number shall be identified as "01"; for example, "0029 00" shall be followed by "0029 01". Subsequent WP sequence numbers to be assigned after "01" shall be "02" through "99"; for example, "0029 02" through ?0029 99".

4.8.9.2.2 Assignment of work package sequence numbers in volumized TMs. When a TM is divided into two or more volumes, the WP sequence number shall continue in sequence. The first volume shall contain as many WPs as necessary beginning with 0001 00. The work packages contained in the second and subsequent volumes shall be numbered consecutively beginning with the number immediately following the last work package sequence number in the preceding volume.

SUPERSEDES PAGE 25 OF MIL-STD-40051A

4.8.9.3 Work package page numbering. Each work package shall be page numbered consecutively using the six digit work package sequence number followed by -1, -2, -3, etc. (e.g., 0001 00-1, 0001 00-2, etc.). Page numbers shall be centered at the bottom of the page. Even numbers shall be assigned to the left-hand pages and odd numbers to right-hand pages. (Refer to figure 1).

4.8.9.4 Work package identification number. For data base retrieval purposes, a unique number shall be assigned to each work package. This WP identification number will not appear on the printed or screen display page and should not be confused with the WP sequence number in 4.8.9.2. It shall be assigned when preparing the document instance in accordance with the modular DTDs and shall not be changed throughout the life of the WP. The WP identification number shall consist of an alpha designation for the type of information contained in the work package, a five digit block number assigned by the acquiring activity, and the TM number less the maintenance level dash numbers.

a. The following alpha designators shall be assigned to the specific types of information contained within the work packages.

G	-	Descriptive information and theory of operation
I	-	Inspection
O	-	Operator instructions
T	-	Troubleshooting procedures
M	-	Maintenance instructions
R	-	Repair Parts and Special Tools List (RPSTL)
S	-	Supporting Information

b. Examples of work package data base identification numbering are shown below.

M00432-9-1425-646

M	Identifies a WP containing maintenance instructions.
00432	Identifies the 432nd work package containing specific maintenance instructions for the M270 Armored Vehicle Mounted Rocket Launcher.
9-1425-646	Identifies the M270 Armored Vehicle Mounted Rocket Launcher TM.

T02000-1-1520-238

T	Identifies a WP containing troubleshooting procedures.
02000	Identifies the 2000th work package containing specific troubleshooting procedures for the AH-64A Helicopter.
1-1520-238	Identifies the AH-64A Helicopter TM.

4.8.10 Maintenance tasks and descriptive information. Procedural maintenance tasks or descriptive information contained in a WP shall have a paragraph title. When it is necessary to divide a maintenance task into subtasks, for clarity, subparagraph titles may be used (Refer to 4.8.11.2). The words "END OF WORK PACKAGE" shall be placed below the last data item (i.e., text, illustration, etc.) at the end of any WP containing procedural tasks.

4.8.11 Paragraphs.

4.8.11.1 Paragraph numbering. Paragraphs and subparagraphs within a WP shall be unnumbered.

4.8.11.2 Paragraphs and subparagraph titles. Paragraphs and subparagraphs within a work package may have titles. If titled, the title shall begin at the left margin. Additional preferred paragraph format is provided in MIL-HDBK-1222.

4.8.12 Procedural steps. Procedural steps shall be used to present detailed step-by-step instructions for performing an operational or maintenance task. Procedural steps may be further divided into substeps and subordinate substeps. Procedural steps shall be numbered consecutively with Arabic numerals. Preferred substep subordinate substep numbering is provided in MIL-HDBK-1222.

4.8.12.1 Procedural step titles. Procedural steps may have paragraph or subparagraph titles. Refer to paragraph 4.8.11.2. Procedural substeps and subordinate substeps shall have no titles.

4.8.13 Tables and lists.

4.8.13.1 Table locations.

a. Tables shall be inserted in the TM on the same page or as soon after the first reference in the text as possible.

b. Full-page tables using a horizontal (landscape) format shall be positioned so that the page must be rotated 90 degrees clockwise to be read. The table number and title shall be placed at the bottom of the page as it exists before rotation.

4.8.13.2 Table numbering. Tables shall be numbered consecutively within each WP in the order of their reference starting with Arabic number 1. If only one table is referenced in a WP, it shall be numbered.

4.8.13.3 Table titles. Each table shall have a title. The titles shall identify the contents or purpose of the table and distinguish that table from others in the TM. Preferred table title format is provided in MIL-HDBK-1222.

4.8.13.4 Table format. Tables designated as "standard information" have no deviations to the number of columns and the titles in the column headings. The format and table headings are automatically generated by the applicable modular DTD and FOSI used for the functional information. Preferred style and format for all non-standard tables is provided in MIL-HDBK-1222.

4.8.13.5 Standard information tables. A list of tables that contain standard information is provided below:

a. Controls and Indicators (MIL-STD-40051-2A)

b. Preshop Analysis Test and Inspection (MIL-STD-40051-3A)

c. Checking Unpacked Equipment (MIL-STD-40051-4A)

d. Preventive Maintenance Checks and Services (PMCS) (MIL-STD-40051-4A)

e. Classification of Material Defects (MIL-STD-40051-4A)

f. Overhaul and Retirement Schedule (MIL-STD-40051-4A)

g. Depot Mobilization Requirements (MIL-STD-40051-4A)

h. Repair Parts List (MIL-STD-40051-5A)

i. Special Tools List (MIL-STD-40051-5A)

j. NSN Index (MIL-STD-40051-5A)

k. Part Number Index (MIL-STD-40051-5A)

l. Reference Designator Index (MIL-STD-40051-5A)

m. Maintenance Allocation Chart (MAC) (MIL-STD-40051-6A)

n. Aviation Maintenance Allocation Chart (MAC) (MIL-STD-40051-6A)

o. Tools and Test Equipment Requirements for MAC/AMAC (MIL-STD-40051-6A)

p. Remarks (MIL-STD-40051-6A)

q. Expendable and Durable Items List (MIL-STD-40051-6A)

r. Mandatory Replacement Parts List (MIL-STD-40051-6A)

s. Component of End Items (COEI) List (MIL-STD-40051-6A)

t. Basic Issue Items (BII) List (MIL-STD-40051-6A)

u. Additional Authorization List (AAL) (MIL-STD-40051-6A)

v. Tools Identification List (MIL-STD-40051-6A)

4.8.13.6 Footnotes to tables. For preferred formatting of numbering footnotes in tables, refer to MIL-HDBK-1222.

4.8.13.7 Tabular information. Small amounts of tabular information may be prepared in a two-column format without identifying it as a table. Each column may have a header.

4.8.13.8 Lists. Lists may be used in lieu of tables, when appropriate. Three types of lists are identified below. Lists may be unnumbered, numbered sequentially, or lettered alphabetically. They may have an optional title.

a. Definition list. The definition list shall consist of the term and the definition. The definition list may have the headers, "**Term**" and **Definition**" above the appropriate sections of the list. Refer to MIL-STD-2361 or MIL-PRF-28001 for more information on the development of lists.

b. Random list. The random list shall consist of one or more items in a random order.

c. Sequential list. The sequential list shall consist of one or more items in a specified order, such as alphabetic, numeric, or alphanumeric.

4.8.14 Placement of text.

a. Preferred text format for 8-1/2 by 11-inch manuals is single column (page wide), although double column can be used. Both single and double column formatted WPs can be included in a single TM if it would make the data more readable or comprehensible, however, both formats should not be used in the same chapter. Text is single spaced (double spaces between procedural steps).

b. Procedural step text shall not be placed on an illustration.

c. Text shall always be positioned within the image area. Text shall not be wrapped around an illustration.

d. The first line of a paragraph shall not be located at the bottom of the page or column. The last line of a paragraph shall not be placed at the top of a new page. Do not place the title or header on the last line of a page or column. Widows and orphans are not allowed.

4.8.15 Placement of illustrations. Illustrations shall be placed as close to their reference in text as possible. Illustrations may float on a page to reduce the white space on a page. Whenever possible, place illustrations on the same or facing page of associated text. Foldout illustrations shall not be included in work packages, but shall follow the last work package, the glossary, or the alphabetical index, whichever forms the last portion of the manual or volume.

4.8.15.1 Rotating illustrations. When necessary, illustrations may be placed sideways on a page (rotated 90 degrees counterclockwise).

4.8.15.2 Placement of text and related illustrations for pocket TMs. Place text for pocket-size manuals on the right-hand pages with supporting illustration on the facing left-hand pages.

4.8.15.3 Repeating illustrations. Illustrations are not repeated unless necessary to support multipage descriptions of tasks or to support a different requirement in another part of the TM.

4.8.16 Margin data. Margin data (usually headers and footers) shall be placed outside the area of the page used for either text, full-page tabular data, or full-page illustrations, but within the printing area dimensions of the page. (Refer to 4.8.16.1 and 4.8.16.2.) Complete headers and footers shall be prepared for all pages except TM covers and title block pages.

4.8.16.1 Headers. Headers shall consist of the TM number centered at the top of each page and the WP sequence number (refer to 4.8.9.2) placed at the extreme top right of each page (Refer to figure 1). If the manual is jointly used by two or more Services, only the acquiring activity's TM number shall be placed on each page. TM numbers for pocket TMs are required on front and back covers only. For pocket manuals only, the WP sequence number may be placed only on the first page of the work package providing it is included as part of the page number on all pages of the work package. The work package sequence number shall be placed at the extreme top right below the TM number on foldout pages.

SUPERSEDES PAGE 29 OF MIL-STD-40051A

4.8.16.2 Footers. Footers shall include the security classification markings (refer to 4.8.22) if any, the page numbers, (refer to figure 1) and other information as specified by the acquiring activity (i.e., change designator).

4.8.16.2.1 Page numbering. For all TMs page numbers shall be centered at the bottom of the page. Even numbers shall be assigned to left-hand pages and odd numbers to right-hand pages. For horizontal TMs, the upper pages shall have even numbers, and the lower pages shall have odd numbers. Page numbers shall be in boldface type. Page numbering for RPSTLs shall also be in accordance with this paragraph and paragraphs 4.8.16.2.1.1 through 4.8.16.2.1.3.

4.8.16.2.1.1 Front matter. Page numbering for front matter shall be as follows.

a. Front cover. Front covers shall be unnumbered.

b. Warning summary. The pages of the warning summary shall be numbered consecutively using lowercase letters (i.e., a, b, c, etc.).

c. Change transmittal page. The change transmittal page shall be unnumbered.

d. List of effective pages/work packages. When a list of effective pages/work packages is prepared, it shall be numbered with upper case letters (i.e., A, B, etc.).

e. Title block page, table of contents, and the How to Use This Manual section. These pages shall be numbered consecutively using lower case Roman numerals beginning with i (i.e., i, ii, iii, etc.).

4.8.16.2.1.2 Rear matter. DA Form 2028s, authentication pages, metric conversion charts (on the inside of the back cover), and back covers shall be unnumbered.

4.8.16.2.1.3 Blank pages. A blank page shall be assigned a number, but it shall appear on the preceding or following page. For example, if page 0001 00-10 of a work package is blank, page 0001 00-9 shall have the number 0001 00-9/10 blank; or if page 0001 00-9 of a work package is blank, page 0001 00-10 shall have the number 0001 00-9 blank/10.

4.8.17 Abbreviations and acronyms.

a. The first use of abbreviations and acronyms shall have the word(s) spelled out completely with the abbreviation or acronym in parentheses immediately after the word(s). Abbreviations and acronyms which are accepted as words (radar, sonar, laser, etc.) need not be spelled out.

b. Abbreviations and acronyms used shall be in accordance with ASME Y14.38, except that abbreviations may be plural (s) or possessive ('s). New abbreviations and acronyms shall not duplicate those presently listed in ASME Y14.38 where possible.

c. All nonstandard abbreviations and acronyms (excluding acronyms for Electrostatic Discharge (ESD) and Hardness-Critical Processes (HCP)) shall be defined in the "list of abbreviations/acronyms" paragraph of the general information work package. (Refer to 5.3.1.9.11.)

d. Abbreviations and acronyms used in tables, but not found in the text or in any other portion of the TM, shall be spelled out in a footnote to the applicable table. Abbreviations and acronyms used in illustrations or figures, but not found in the text or in any other portion of the TM, shall be spelled out in a note to the applicable illustration or figure.

SUPERSEDES PAGE 30 OF MIL-STD-40051A

e. When abbreviations or acronyms are used as markings on the equipment (placarding), the same abbreviations or acronyms shall be used in the TM.

4.8.18 Symbols.

4.8.18.1 General information for symbols. All nonstandard symbols (excluding icons) shall be defined in the "list of abbreviations/acronyms" paragraph of the general information work package. (Refer to 5.3.1.9.11) New symbols shall not duplicate those presently listed in MIL-STD-17 where possible.

4.8.18.2 Metric symbols. Metric symbols shall be in accordance with IEEE 945-84. ℭ

4.8.19 Nuclear hardness (hardness-critical processes) marking. All Hardness-Critical Processes shall be marked with the acronym **HCP** as shown in subparagraph "b" below. The acronym shall be prepared in boldface type and in the same style and size as the adjacent text. The acronym shall not be shown with the titles in the table of contents. Use of the acronym is as follows.

a. When the entire task and all subordinate paragraphs and steps relate to establishing nuclear hardness, the acronym **HCP** shall precede the task title. (For example, **HCP DISASSEMBLY**.)

b. When the entire task and all subordinate paragraphs and steps do not contribute to establishing nuclear hardness, only those which do contribute shall be annotated with the acronym **HCP**. For example,

SERVICING

1. _____.

2. **HCP** _____.

c. Operating or maintenance actions which could degrade hardness, but which are not directly involved in establishing nuclear hardness, shall not be annotated with the acronym, but shall be preceded by a caution.

4.8.20 Electrostatic Discharge (ESD) sensitive marking.

a. All paragraphs addressing handling or maintenance which could damage ESD sensitive parts shall be identified by the acronym **ESD** as shown below. Preparation and use of the acronym shall be similar to the requirements of 4.8.19. For example,

REMOVAL

1. _____.

2. **ESD** _____.

b. Handling or maintenance actions which could damage ESD sensitive parts, but which are not directly related to handling or maintenance of ESD sensitive parts, shall not be annotated with the acronym ESD, but shall be preceded by a caution.

c. Mark figures, drawings, and schematics with the ESD acronym in accordance with MIL-STD-1686.

SUPERSEDES PAGE 31 OF MIL-STD-40051A

4.8.21 Quality Assurance (QA) symbol. Depot and aviation maintenance procedures which have a major quality assurance effect shall be identified by the acronym **QA** in boldface letters. Only procedures at the step level shall be labeled with **QA**. (For example, 1. **QA** _____.)

4.8.22 Security classification, emergency page and protective markings.

4.8.22.1 Security classification markings. When specified by the acquiring activity, a classified TM shall be prepared. The security classification markings for classified TMs, titles of parts, chapters, work packages, appendixes, paragraphs, illustrations, tables, and their contents, shall be identified in accordance with DoD 5200.1-R and DoD 5220.22-M, and Executive Order 12958. For guidance on classification and handling restrictive markings on Compact Disk-Read Only Memory (CD-ROM), refer to MIL-HDBK-9660. Also refer to MIL-HDBK-1222 for specific information on security classification markings. Additional instructions applicable to security classification markings are described in paragraphs 4.8.22.2 through 4.8.22.6.

4.8.22.2 Overall security classification. The overall security classification assigned to a TM shall agree with the highest security classification assigned to any portion within, and shall be marked accordingly at the top and bottom of the front cover, title block page, and rear cover sheets. The security classification markings for pages, including those for unclassified pages, shall be bold and at the top and bottom center of each page. (Refer to figure 5.)

4.8.22.3 Blank page backing a classified page. Blank pages normally require no copy. However, if the reverse side of a blank page contains classified material, security markings for the blank page shall be bold and at the top and bottom center of the blank page. The blank page shall reflect the highest classification of the reverse side, and include the statement "This page is unclassified".

4.8.22.4 Emergency page markings. When specified by the acquiring activity, emergency pages shall be prepared. Pages containing emergency information shall have a dark border that indicates to the user that they are emergency pages. The border should go to the edge of the page if the composition system allows it and should be made up of characters such as large Xs, large asterisks, or large slashes. (Refer to figure 6 for examples of emergency page markings.)

4.8.22.5 Protective markings. When specified by the acquiring activity, a FOR OFFICIAL USE ONLY protectively marked manual shall be prepared. In FOR OFFICIAL USE ONLY manuals, the protective marking shall be bold and at the bottom of each page.

4.8.22.6 COMSEC protective markings. Unless requirement is specifically excluded by the acquiring activity, Army Communications Security (COMSEC) Equipment Manuals shall contain the protective marking "FOR OFFICIAL USE ONLY".

4.8.23 Referencing.

4.8.23.1 Other documents. Reference shall be made only to other documents available and authorized to the user. Reference shall be to the publication number and, when necessary, to the work package sequence number. References to pending publication actions shall not be made.

4.8.23.2 Government specifications and standards. Reference shall be made to the basic number for Government specifications and standards.

SUPERSEDES PAGE 32 OF MIL-STD-40051A

4.8.23.3 Within the TM. Reference made within the TM shall be to the necessary location data only. For example, if the entire chapter is applicable, only the chapter number shall be referenced; if the data needed is contained in another work package or within the same work package, reference shall be made to the work package sequence number, to maintenance task titles, to titled procedures, to steps, to titled figures, and to titled tables.

4.8.23.4 Repeating information. Repeating information shall be allowed to ensure the work package information is complete. Information, two pages or less, may be repeated; information more than two pages shall be referenced.

4.8.23.5 Equipment, components, and parts. Reference to parts of the equipment and to equipment components may be by nomenclature, model, type, reference designator, and figure and item number, as applicable. Reference shall be made only to models or types of equipment covered by the manual. To facilitate coverage of modified or additional models or types at a later date, references shall be held to a minimum.

4.8.23.6 National Stock Numbers (NSNs) and Part Numbers (P/Ns). Reference to NSNs shall be made only in tables, other tabular material, and lists. Reference to NSNs shall not be made on illustrations or in illustration legends. Reference to P/Ns shall not be made in the narrative portions of the TM, procedural steps, illustrations, or legends, except when essential for identification. Reference to P/Ns may be made in tables, other tabular material, and lists.

4.8.23.7 Equipment panel markings (placarding). Reference shall be made to panel markings and switch positions exactly as marked on the equipment. However, symbols on panel markings shall be spelled out when they cannot be produced by the software, composing equipment, or printers used in producing the manual, such as the symbol for ohm, infinity, etc.

4.8.23.8 Metric and U.S. standard measurements. Unless specified otherwise by the acquiring activity, all measurements shall be expressed in both U.S. standard units (e.g., ounces, pounds, gallons, inches, feet, knots, miles, etc.) and metric units. U.S. standard measurements shall be followed by the metric conversion in parentheses unless the equipment, instrument, or tool, etc., is calibrated in metric units. In that case, metric units shall be first, followed by the U.S. standard units. (For example, "169.5 Nm (125 lb-ft)".)

4.8.23.9 Temperature. Reference shall be made to temperature readings as calibrated on the equipment. If other than Fahrenheit, the equivalent in Fahrenheit shall follow in parentheses. General temperature references, such as room temperature, shall be given in degrees Fahrenheit (for example, 78°F).

4.8.23.10 TM divisions. Reference shall be made to any major division of the manual. (For example, Volume 5, Chapter 6, Table of Contents, Glossary, Index, etc.) or by an abbreviation (WP, etc.).

4.8.23.11 Volumes. References to information in another volume within the TM shall include the volume number.

4.8.23.12 Work packages. References to work packages within the same TM shall be to the work package sequence number (i.e., WP 0125 00, etc.).

4.8.23.13 Maintenance tasks, procedures, and paragraphs. Reference to maintenance tasks, procedures, and paragraphs shall be by work package sequence number and reference to title, as necessary (i.e., WP 0025 00, Disassembly; WP 0012 00, Equipment Data).

4.8.23.14 Tables. Reference shall be made to tables by table number (for example, table 2) within a work package. Reference shall be made to tables in a different work package by work package sequence number and table number (for example, WP 0012 00, table 2). Reference shall be made only to tables within the same manual or another volume of the same manual.

4.8.23.15 Footnotes. Reference shall be made to footnotes when essential for reference, explanation, comments, or other information.

4.8.23.16 Figures and multisheet figures. Reference shall be made to figures within a work package by figure number (for example, figure 2) and the sheet number for multisheet illustrations, when applicable (for example, figure 17, sheet 1). Reference shall be made to figures in a different work package by work package sequence number and figure number (for example, WP 0012 00, figure 2). References shall be made only to figures within the same manual or another volume of the same manual.

4.8.23.17 Index numbers.

a. Reference shall be made to figure numbers first, followed by the index number; for example, (figure 6, 34). However when multiple references refer to the same figure, only the first reference shall indicate the figure number. When the index numbers continue on successive pages, the figure number shall be repeated with the first index number reference on each succeeding page. For example,

   "1. Unscrew safety disc retainer (figure 2, 1) from valve body (2).

   2. Remove safety disc (3) and safety disc washer (4) from valve body (2)."

b. When the index numbers continue in sequence for procedures requiring two or more pages, the figure number shall be repeated in the first reference on each succeeding page.

c. If two or more figures are involved in the same sequence (procedure or task), the figure with the greater number of items shall be cited as described above. When the reference changes, the new figure reference shall be cited and also have the index number follow the figure number, i.e., "(figure 5, 21)." In such cases, the paragraph lead-in shall contain a statement similar to the following:

   "NOTE

   Item numbers below refer to figure 4 unless otherwise indicated."

d. For illustrations which do not have figure numbers, reference shall be made to the index numbers only.

4.8.23.18 Items on diagrams. Reference shall be made to parts on diagrams by enough of their description or reference designator to identify the item (for example, resistor A6R11).

4.8.24 Equations. The use of equations shall be held to the minimum use required by the needs of the TM user.

NOTE

MATHPACK 911001 as included in MIL-PRF-28001 shall be used for preparing equations. The use of some equations may be limited by the Mathpack and the output system.

4.8.25 Nomenclature.

4.8.25.1 Nomenclature consistency and applicability. Nomenclature, other terms, and names shall be consistent within a manual and throughout the RPSTL, MAC, and other directly related manuals. Statements that explain applicability for individual items of equipment shall use specific serial numbers, block designations, model designations, or similar identification. Such terms as "on later equipment" and "on early serial numbers" shall not be used.

4.8.25.2 Official/approved nomenclature. Unless specified otherwise by the acquiring activity, only approved names and official nomenclature shall be used. (Official nomenclature shall be the nomenclature used in the RPSTL.) If unofficial nomenclature (common name) is approved, an appropriate nomenclature cross-reference list shall be prepared for the TM. (Refer to MIL-STD-40051-1A.) Shortened versions of the approved nomenclature are not considered deviations. Approved nomenclature shall be used wherever the use of a common name might be ambiguous.

4.8.25.3 Military terms. Military terms used shall be in accordance with Joint Pub 1-02, or any approved dictionary or glossary of Army military terms.

4.8.25.4 Automatic electronic test and checkout terminology. Terms used for automatic electronic test and checkout shall be in accordance with MIL-STD-1309.

4.8.26 Comprehensibility. Technical manuals shall be written for the target audience. Reading grade level shall be as specified by the acquiring activity.

4.8.27 Graphics.

4.8.27.1 Graphic format. All graphics developed in accordance with this standard shall be delivered in one of the three graphic formats: MIL-PRF-28003, Computer Graphic Metafile (CGM); MIL-PRF-28002, Continuous Acquisition and Life-cycle Support (CALS) Raster; or MIL-PRF-28000, Initial Graphics Exchange Specification (IGES). Other commercial graphic formats are acceptable if approved by the acquiring activity.

a. The CGM file format is the preferred graphics file format.

b. All graphics files for a particular TM should be applied in the same graphics format if practical. Otherwise, files may be delivered in any combination of the allowable formats.

c. Appropriate header and identification information shall be included in each graphics file. Refer to the applicable specification for the specific requirements.

4.8.27.2 Types of graphics. As applicable, the following types of graphics shall be used in the preparation of TMs. Preferred format of these graphics and typical examples are provided in MIL-HDBK-1222.

a. Line drawings.

b. Photographs.

c. Engineering drawings.

d. Diagrams.

e. Charts and graphs.

REPRINTED WITHOUT CHANGE

f. Tools and test equipment illustrations.

4.8.27.2.1 Line drawings. Line drawings including exploded views, locator views, and detailed views shall be used to support the operational and maintenance procedures, and the RPSTLs. Examples of line drawings are provided in MIL-HDBK-1222.

a. When index numbers are used to locate and identify equipment components or parts, the index numbers shall be assigned sequentially (clockwise, disassembly, or in the order mentioned in text).

b. To assist the maintenance technician or operator in locating major components, controls and indicators, etc., locator views may be included.

c. When the illustration does not adequately or clearly depict the subject matter or part(s), specific detailed views may be included to support the main illustration.

4.8.27.2.2 Multiview and multisheet illustrations. Multiview and multisheet illustrations may be used to clarify, identify significant features, or further detail equipment assemblies, subassemblies, and detailed parts. Refer to MIL-HDBK-1222 for examples of multiview and multisheet illustrations.

4.8.27.2.3 Photographs. Photographs may be used for illustrations. When a photograph provides for better clarity than a line drawing, the photograph should be used. Photographs should not be used on foldouts. If the intention is to use photographs in lieu of line art, it is preferred that a digital camera be used to produce the required photos. This negates the use of halftones and the need for retouching and screening.

4.8.27.2.3.1 Prescreened photographs. If paper output is the final product, prescreened photographs are acceptable as final reproducible copy provided they have been screened only once, and the screen on the final sized illustrations shall be as specified by the acquiring activity. When prescreened photographs are used, they shall be clearly marked to indicate prescreening. As specified by the acquiring activity, unscreened continuous tone photographs and/or original illustrations shall be supplied with final reproducible copy.

4.8.27.2.4 Engineering drawings. Engineering drawings may be used with the approval of the acquiring activity. Engineering drawings are controlled documents and when used, they shall be used in their entirety, without modification. They must be reduced or redrawn to meet page size restrictions. When the controlled elements of an engineering drawing (i.e., title block, sources of supply, revision data, etc.) are removed, leaving only the “field” of the drawing, it is treated as a typical line drawing.

4.8.27.2.5 Diagrams.

4.8.27.2.5.1 Diagram specifications. Diagrams shall be prepared in accordance with the specifications listed below.

Subject	Equipment Covered	Specification
Abbreviations	All	ASME Y14.38
Drafting Practices	Mechanical, Electrical and Electronic	ANSI Y14.15-1966 (R1973)
Engineering Drawing Practices	All	MIL-STD-100

SUPERSEDES PAGE 36 OF MIL-STD-40051A

Graphic Symbols	Electrical and Electronic	IEEE 315A-86, IEEE 280-85
	Mechanical	MIL-STD-17
	Digital (Logic)	IEEE 91-84
	Fluid Power	ANSI Y32.10
Reference Designators	Electrical and Electronic	IEEE 200-75
Unit Symbols	All	IEEE 260-78
Logic	All	IEEE 91-84

4.8.27.2.5.2 Types of diagrams. The following types of diagrams may be included in the IETM. Refer to MIL-HDBK-1222 for examples of types of diagrams.

a. Block diagrams.

b. Schematic diagrams.

c. Pictorial diagrams.

d. Cutaway diagrams.

e. Logic diagrams.

f. Wiring diagrams/wire lists.

g. Cable diagrams.

h. Piping diagrams.

i. Test setup diagrams.

4.8.27.2.6 Charts and graphs. Charts and graphs shall be prepared as illustrations. Instructions shall be provided for use and interpretation of complex graphs.

4.8.27.2.7 Tools and test equipment illustrations. Only uncommon or unusual uses and connections for test purposes shall be illustrated if it is essential to do so to avoid misunderstanding. Unusual operations shall also be illustrated. Special tools and test equipment shall be illustrated, as applicable. Standard tools and test equipment shall not be illustrated, nor shall self-evident or generally known uses be shown.

4.8.27.3 Elements of illustrations.

4.8.27.3.1 Border rules and boxes. Border rules and boxes shall not be used for single illustrations, but are used to separate multisection illustrations on the same page or for locator/detail views. (Refer to MIL-HDBK-1222 for an example of border rules and boxes.)

4.8.27.3.2 Use of the human figure. When necessary, illustrations may include a human figure or parts of the body. The illustrated human figure shall not obscure necessary details of the item(s) being illustrated.

4.8.27.3.3 Credit lines.

a. The photographer's or illustrator's name shall not appear on any illustration.

b. A manufacturer's name, symbol, or trademark shall not appear on illustrations for the purpose of identifying the illustration.

4.8.27.3.4 Callouts. Index numbers, reference designators, nomenclature, leader lines, sweep arrows, legends, and other identifiers shall be used, when necessary, to identify significant features. Refer to MIL-HDBK-1222 for examples of the use of these types of identifiers.

4.8.27.3.4.1 Index numbers. Index numbers start with Arabic numeral 1 and continue consecutively. Index numbers continue in sequence from one sheet to another in a set of multisheet illustrations.

a. When a series of illustrations are used within the same informational, operational or maintenance work package (e.g., theory, operator instruction, or removal procedure), index numbers shall continue from one illustration in that series to the next, however, if an item that already has been assigned an index number is used in more then one illustration in that series, it must retain the same index number.

b. Index numbers shall be in clockwise sequence (beginning at 11 o'clock), disassembly sequence, or in order of mention in the text.

c. All items shown as exploded shall be identified. Items drawn in phantom need not be identified.

d. Index numbers shall not be contained within circles unless required for a specific reason in

4.8.27.3.4.2 RPSTL figures. For RPSTL figures, the sequence of index numbers start at 11 o'clock and proceed clockwise.

4.8.27.3.5 Leader lines and arrowheads. Leader lines shall be uniform, short, and as straight as possible; avoid the use of dogleg-shaped lines unless absolutely necessary. Arrowheads may be added for clarity. Do not allow leader lines to touch the callout. Do not allow arrowheads to enter the object to which they apply. If it is necessary to enter the object to provide for greater clarity, a breakoff symbol shall be used in lieu of an arrowhead.

4.8.27.3.6 Illustration legends. When necessary for clarity, legends shall be prepared to identify index numbers on illustrations. Legends shall be a part of the illustration and shall not be placed in the text area. Examples of legends are provided in MIL-HDBK-1222.

4.8.27.3.7 Procedures on illustrations. Procedural steps shall not be placed on illustrations.

4.8.27.4 Graphic techniques. In addition to the graphic techniques provided in 4.8.27.4.1 through 4.8.27.4.10 refer to MIL-HDBK-1222 for suggested graphic techniques used for the preparation of U.S. Army TMs.

4.8.27.4.1 Illustration figure numbers. Figure numbers for illustrations contained in work packages shall be avoided whenever possible. However, figure numbers for Depot Maintenance Work Requirements (DMWRs), Repair Parts and Special Tool Lists (RPSTLs), and foldouts are required. Figure numbers shall be placed on the illustration and be an integral part of the illustration.

4.8.27.4.2 DMWR figure numbers. Figures shall be numbered consecutively within each work package starting with the Arabic numeral 1.

SUPERSEDES PAGE 38 OF MIL-STD-40051A

4.8.27.4.3 RPSTL figure numbering. Figures for RPSTL TMs shall be numbered sequentially within a RPSTL chapter (not within each work package), using Arabic numerals beginning with 1. Figures in RPSTL supporting information work packages shall also be numbered sequentially within a RPSTL chapter (not within each work package), using Arabic numerals beginning with 1.

4.8.27.4.4 Foldout figure numbering. Foldout figures shall be numbered in consecutive ascending numerical sequence within each WP, beginning with Arabic number 1. Figures are numbered in the order of reference in the WP text. Figure numbers for foldouts shall be placed preceding the figure title under the illustration. The figure number shall be an integral part of the foldout illustration.

4.8.27.4.5 Multisheet numbering. Multisheet figures shall be consecutively sheet numbered following the title; for example, "Figure 2. Wing Hydraulic Assembly (Sheet 1)." or **?**Figure 1. Cable Assembly W12 Wiring Diagram (Sheet 1)." Remaining sheets shall be numbered in consecutive order, Sheet 2, Sheet 3, etc.

4.8.27.4.6 Illustration figure titles. When titles are used refer to MIL-HDBK-1222 for placement and format.

4.8.27.4.7 Illustration identification numbers. Each illustration shall be assigned a unique identification number provided by the proponent activity.

a. Contractor's identification number may be used when approved by the proponent activity.

b. When the identification number is to be printed in the TM, such number shall be approximately 4- to 6- point type and placed in the lower right-hand corner of the illustration (within the graphics area) sufficiently removed to avoid being confused as part of the illustration.

4.8.27.4.8 Portraying signal flow. Signal flow, especially for electrical and electronic equipment, critically affects the understandability of diagrams. To assist the TM user in following the diagram, where possible, major signal or pressure flow shall be from left to right, and feedback or return flow shall be from right to left.

4.8.27.4.9 Color in illustrations. Unless specified otherwise by the acquiring activity, black and shades of black (one color) shall be used for TMs. Prior approval for color will be obtained by the acquiring activity from the U.S. Army Publishing Agency (USAPA). The acquiring activity will provide written approval, designating color(s) to be used.

4.9 Style and format requirements for technical content of frame-based TMs. The technical content format requirements for frame-based TMs shall be in accordance with the general requirements contained in MIL-PRF-87268 and the specific requirements provided in 4.9.1 through 4.9.24 of this standard. Guidance for preparation of CD face and flyleaf information is contained in Appendix A of MIL-HDBK-1222.

4.9.1 Development of work package technical manuals. The style and format guidance provided in this standard has been established to facilitate the development of technical information for the WP concept. The WP concept is defined as a logical combination of requirements and improved presentation techniques designed to enhance digital display of frame-formatted pages. A work package IETM is specifically designed to support individual functional information including troubleshooting and maintenance work tasks for a weapon system or equipment in accordance with the requirements of MIL-STD-40051-1A through MIL-STD-40051-6A.

SUPERSEDES PAGE 39 OF MIL-STD-40051A

4.9.2 IETM divisions. The hierarchy of a frame-based TM consists of introductory matter, planning data and a series of work packages that include the types of data listed below.

Descriptive information and principles of operation
Troubleshooting information
Procedural information (operator and maintenance tasks)
Supporting Information

4.9.2.1 Work packages. Work packages shall be used to logically divide TM data into functional descriptive or task-oriented information.

4.9.2.1.1 Work package content. Work packages may contain identification information, initial setups, descriptive information, and operating, troubleshooting, and maintenance tasks. These data types can be further divided into paragraphs, procedural steps, tables, lists, warnings, cautions and notes, and supporting graphics. Parts information shall be accessible in any of the data types, as necessary. Refer to MIL-STD-40051-1A through MIL-STD-40051-6A for the specific content requirements for each of the functional work package types (i.e., description information, operator's instructions, troubleshooting, and maintenance).

4.9.2.1.2 Parts information in work packages. Parts information shall be available at the point of the presentation in any work package to which the specific weapon system and equipment replaceable and repairable part is identified. Inclusion of parts information shall be used to:

a. Identify a part or parts by part number and name.

b. Provide any additional parts data required to order the part.

c. Show the relationship of a part to other parts of the system or equipment.

d. Enhance or clarify the supporting operator, descriptive, or theory of operation data.

4.9.2.1.3 Development of individual work packages. Ideally, each WP in a manual will be an independent, stand alone data unit. It may be required to group some information or maintenance tasks in one work package and divide others into several WPs. Division or selection of coverage will depend on various factors. These factors may include but are not limited to:

a. A specific work package that is required by MIL-STD-40051-1A through MIL-STD-40051-6A.

b. A specific work package that is required by the IETM content selection matrix provided by the contracting activity (Refer to Appendix A).

c. A WP may be determined by the operational modes, complexity of the troubleshooting or maintenance action, or level(s) of troubleshooting or maintenance covered. Separate WPs may be developed for the same equipment or component for different maintenance levels (e.g., a WP for operator’s maintenance and a WP for direct support maintenance for the same item of equipment).

d. Two or more WPs for an identical troubleshooting or maintenance task may be required because the task is performed differently due to differences in configurations.

REPRINTED WITHOUT CHANGE

e. Separate WPs due to different initial setup information for a set of maintenance tasks covering a repairable component. If the support equipment, tools, materials and personnel used to perform removal and installation is very different than the support equipment, tools, materials and personnel used to perform disassembly and reassembly for the same system or component, it may be better to separate this information into two WPs.

4.9.3 Font size and style. Font style, size, and spacing shall be in accordance with MIL-PRF-87268.

4.9.4 Use of alerts. An alert is any message, communication, notice, or output which requires manual acknowledgment from the user of the IETM. Alert messages shall be displayed within a border. Preferred styles and formats of alert borders are provided in MIL-HDBK-1222. Alerts shall be used to convey the following types of information, such as:

a. Warnings, cautions, and notes (Refer to 4.9.5)

b. Hardness-critical processes (Refer to 4.9.16).

c. Electrostatic discharge (ESD) sensitive parts (Refer to 4.9.17).

d. Flight safety critical aircraft parts (FSCAP) (Refer to 5.4.1.7.22)

4.9.5 Warnings, cautions, and notes.

4.9.5.1 Use and placement.

a. A warning shall precede the text of any procedure involving a clear danger to the person doing that procedure. A caution shall precede the text of any procedure involving a clear risk of damage to the equipment. A note, used to highlight essential procedures, conditions, or statements may either precede or follow the text. If multiple warnings, cautions, or notes apply to the same text, the warnings shall appear first, cautions second, notes last.

b. Warnings, cautions, and notes shall not be numbered. When a warning, caution, or note consists of two or more paragraphs, the header **WARNING**, **CAUTION**, or **NOTE** shall not be repeated above each paragraph. Warnings, cautions and notes on unrelated topics may not be contained under one heading.

c. When warnings or cautions exist in separate categories for the same set of technical information, they shall be successively displayed in decreasing order of severity: Warnings first, followed by cautions. Warnings or cautions in the same category shall be successively displayed. However, there shall be no requirement to determine an order of importance within the same category. When related warnings or cautions of the same category for the same block of technical information, it is permissible to group them within a common alert border but they shall be visually distinct. In such a case the title shall indicate the combined danger.

4.9.5.1.1 Display requirements for warnings, caution, and notes. Warnings, cautions, and notes shall be prominently displayed and shall be treated as an alert. The warning, caution, and note alert shall stay active as long as the condition exists. The alert shall remain displayed until the user manually acknowledges the alert. The warnings and cautions shall be contained within a border. Preferred styles and formats for borders are provided in MIL-HDBK-1222.

REPRINTED WITHOUT CHANGE

4.9.5.2 Hazardous material warnings. Procedures prescribed for the operation and maintenance of equipment are consistent with the safety standards established by the Occupational Safety and Health Act (OSHA) Public Law 91-596 and Executive Order 12196. When exposure to hazardous chemicals or other adverse healths factors or use of equipment cannot be eliminated, guidance pertaining to the exposure is included in the TM. A list of personnel protective devices should also be included. Hazardous materials warnings shall be presented in the standard warning format without an icon (as described above in 4.9.5.1). Hazards that result from a combination of materials must clearly be identified to indicate that mixing or combining the materials creates the hazard.

4.9.6 Work packages. Each work package shall include the work package identification information described in MIL-STD-40051-1A through MIL-STD-40051-6A, as applicable. Work package identification information shall be displayed in the title bar area of the user's EDS.

4.9.6.1 Work package initial setup information **<wpinfo>**. Initial setup information shall be included in each work package and shall immediately follow the WP identification information. It provides the maintenance technician with general information, equipment, parts, material, and authorized personnel required to perform and complete all the maintenance tasks included in the work package. For initial setup information requirements for specific types of work packages, refer to MIL-STD-40051-2A through MIL-STD-40051-4A. Œ

4.9.6.2 Work package identification number. For data base retrieval purposes, a unique number shall be assigned to each work package. This WP identification number will not appear when viewed on the user's EDS display page. If LSA/LMI has been developed, the LCN numbers assigned to the information or task data may be used to identify the WP. If LSA/LMI data is not available, an optional numbering method may be used. A typical method of numbering is provided below.

a. The WP identification number may consist of an alpha designation for the type of information contained in the work package, a five digit block number assigned by the acquiring activity, and the TM number less the maintenance level dash numbers as follows.

(1) The following alpha designators shall be assigned to the specific types of information contained within the work packages.

G	-	Descriptive information and theory of operation
I	-	Inspection
O	-	Operator instructions
T	-	Troubleshooting procedures
M	-	Maintenance instructions
S	-	Supporting information

SUPERSEDES PAGE 42 OF MIL-STD-40051A

(2) Examples of work package data base identification numbering are shown below.

M00432-9-1425-646

M	Identifies a WP containing maintenance instructions.
00432	Identifies the 432nd work package containing specific maintenance instructions for the M270 Armored Vehicle Mounted Rocket Launcher.
9-1425-646	Identifies the M270 Armored Vehicle Mounted Rocket Launcher TM.

T02000-1-1520-238

T	Identifies a WP containing troubleshooting procedures.
02000	Identifies the 2000th work package containing specific troubleshooting procedures for the AH-64A Helicopter.
1-1520-238	Identifies the AH-64A Helicopter TM.

4.9.7 Maintenance tasks and descriptive information. Procedural maintenance tasks or descriptive information contained in a WP shall have a title. The title shall be identical to the title in the list of contents. The words “END OF WORK PACKAGE” shall be placed below the last data item (i.e., text, illustration, etc.) at the end of any WP containing procedural tasks.

4.9.8 Paragraphs.

4.9.8.1 Paragraph numbering. Paragraphs within a WP shall be unnumbered.

4.9.8.2 Paragraph titles. Paragraphs may have titles. Paragraph titles shall be in capital letters.

4.9.9 Procedural steps. Procedural steps shall be used to present detailed step-by-step instructions for performing an operational or maintenance task. Subordinate steps may be used to differentiate an expert step from a novice step. Unless otherwise authorized by the acquiring activity, only one expert step at a time should appear on the user’s EDS. When subordinate steps are used in combination with an expert step, the subordinate steps shall appear indented under the expert step on the user’s EDS. Novice subordinate steps shall be scrollable on the user’s EDS.

4.9.9.1 Procedural step numbering. Unless otherwise specified by the acquiring activity, procedural steps and substeps shall be numbered. If numbering is used the following guidelines shall be followed.

a. Procedural steps shall be numbered consecutively with Arabic numerals.

b. If subordination is used to indicate novice steps, substep letters (a, b, c, etc.) shall be used.

4.9.9.2 Procedural step titles. Procedural steps shall not have titles.

4.9.10 Tables and lists.

4.9.10.1 Table locations. Placement of tables shall be in accordance with MIL-PRF-87268.

4.9.10.2 Table numbering. Tables shall not be numbered.

4.9.10.3 Table titles. In general, tables shall have a title. The table title shall appear above the table. The table title shall also appear in the title bar. If a table is scrollable, the table title shall have a "sticky" table title. Preferred table title format is provided in MIL-HDBK-1222.

4.9.10.4 Table format. Tables designated as "standard information" have no deviations to the number of columns and the titles in the column headings. The format and table headings are automatically generated by the applicable modular DTD and FOSI used for the functional information. Preferred style and format for all non-standard tables is provided in MIL-HDBK-1222.

4.9.10.5 Standard information tables. A list of tables that contain standard information is provided below. When it is determined that only a specific row(s) of a complete table is required to support the associated procedural task or informational data, the information contained in the entire row(s) shall be displayed.

a. Controls and Indicators (MIL-STD-40051-2A)

b. Classification of Material Defects (MIL-STD-40051-4A)

c. Overhaul and Retirement Schedule (MIL-STD-40051-4A)

d. Maintenance Allocation Chart (MAC) (MIL-STD-40051-6A)

e. Aviation Maintenance Allocation Chart (MAC) (MIL-STD-40051-6A)

f. Tools and Test Equipment Requirements for MAC/AMAC (MIL-STD-40051-6A)

g. Remarks (MIL-STD-40051-6A)

h. Expendable and Durable Items List (MIL-STD-40051-6A)

i. Mandatory Replacement Parts List (MIL-STD-40051-6A)

j. Component of End Items (COEI) List (MIL-STD-40051-6A)

k. Basic Issue Items (BII) List (MIL-STD-40051-6A)

l. Additional Authorization List (AAL) (MIL-STD-40051-6A)

m. Tools Identification List (MIL-STD-40051-6A)

4.9.10.6 Footnotes to tables. There shall be no footnotes in tables. Footnote data shall be linked using a hotspot technique.

4.9.10.7 Lists. Lists may be used in lieu of tables, when appropriate. Three types of lists are identified below. Lists may be unnumbered, numbered sequentially, or lettered alphabetically. They may have an optional title.

a. Definition list. The definition list shall consist of the term and the definition. The definition list may have the headers, "**Term**" and **Definition**" above the appropriate sections of the list. Refer to MIL-STD-2361 or MIL-PRF-28001 for more information on the development of lists.

b. Random list. The random list shall consist of one or more items in a random order.

c. Sequential list. The sequential list shall consist of one or more items in a specified order, such as alphabetic, numeric, or alphanumeric.

4.9.11 Display of text. All descriptive information and task text shall be displayed in accordance with MIL-PRF-87268. Refer to MIL-HDBK-1222 for typical examples of screen text.

4.9.12 Display of illustrations. Illustrations shall be displayed on the user's EDS in accordance with MIL-PRF-87268. Refer to MIL-HDBK-1222 for typical examples of screen text.

4.9.13 Title bar. The title bar area of the user's EDS shall contain the official title of the information. The title shall be repeated and displayed in the client text area. The title shall be the same as appears in the list of contents.

4.9.14 Abbreviations and acronyms. Acronyms, abbreviations, and unusual terms may be used in any WP text, when applicable. It is not necessary to spell out the words completely after the first use of an acronym or abbreviation. An acronyms, abbreviations, and uncommon terms work package shall be developed explaining all acronyms, abbreviations, and unusual terms used in the IETM (Refer to paragraph 5.4.2). It is not necessary to make the acronyms, abbreviations, and uncommon terms work package automatically accessible when an acronyms, abbreviations, or uncommon term is used in a WP. When needed the acronyms, abbreviations, and uncommon terms work package may be manually selected using the IETM list of contents.

a. Abbreviations and acronyms which are accepted as words (radar, sonar, laser, etc.) need not be included.

b. Abbreviations and acronyms used shall be in accordance with ASME Y14.38, except that abbreviations may be plural (s) or possessive ('s). New abbreviations and acronyms shall not duplicate those presently listed in ASME Y14.38 where possible.

c. When abbreviations or acronyms are used as markings on the equipment (placarding), the same abbreviations or acronyms shall be used in the IETM.

4.9.15 Symbols.

4.9.15.1 General information for symbols. All nonstandard symbols shall be defined in the WP of nonstandard symbols (refer to paragraph 5.4.2). New symbols shall not duplicate those presently listed in MIL-STD-17 where possible.

4.9.15.2 Metric symbols. Metric symbols shall be in accordance with IEEE 945-84. œ

4.9.16 Nuclear hardness (hardness-critical processes) marking. All Hardness-Critical Processes shall be preceded with the alert acronym "**HCP**". Use of the acronym is as follows.

a. When the entire task and all steps relate to establishing nuclear hardness, the **HCP** alert shall precede the first step of the task.

b. When the entire task and steps do not contribute to establishing nuclear hardness, only those which do contribute shall be annotated with the **HCP** alert.

SUPERSEDES PAGE 45 OF MIL-STD-40051A

c. Operating or maintenance actions which could degrade hardness, but which are not directly involved in establishing nuclear hardness, shall not be annotated with the acronym, but shall be preceded by a caution.

4.9.17 Electrostatic Discharge (ESD) sensitive marking.

a. All steps addressing handling or maintenance which could damage ESD sensitive parts shall be preceded by the alert acronym **"ESD"**.

b. Handling or maintenance actions which could damage ESD sensitive parts, but which are not directly related to handling or maintenance of ESD sensitive parts, shall not be annotated with the acronym ESD, but shall be preceded by a caution.

c. Mark figures, drawings, and schematics with the ESD acronym in accordance with MIL-STD-1686.

4.9.18 Quality Assurance (QA) symbol. To indicate depot and aviation maintenance procedures which have a major quality assurance effect, a statement such as "QA check" shall be used following the procedure or step.

4.9.19 Security classification and protective markings. When specified by the acquiring activity, a classified IETM shall be prepared. The security classification markings for classified IETMs, shall be identified in accordance with DoD 5200.1-R and DoD 5220.22-M, Executive Order 12958 and MIL-PRF-87268. For guidance on classification and handling restrictive markings on Compact Disk-Read Only Memory (CD-ROM), refer to MIL-HDBK-9660.

4.9.20 Referencing.

4.9.20.1 Other documents. When authorized by the acquiring activity, reference shall be made only to other documents available and authorized to the user. Reference shall be made by publication number. References to pending publication actions shall not be made.

4.9.20.2 Government specifications and standards. When authorized by the acquiring activity, reference shall be made to the basic publication number for Government specifications and standards.

4.9.20.3 Within the IETM. When it becomes necessary to reference to other work packages, descriptive information, maintenance tasks, or other data within the same IETM, it shall be linked and referenced by title or appropriate text. The title shall be the same used in the list of contents.

4.9.20.4 Equipment, components, and parts. Reference to parts of the equipment and to equipment components may be by nomenclature, model, type, reference designator. The referenced items may be linked to a graphic for identification and location.

4.9.20.5 National Stock Numbers (NSNs) and Part Numbers (P/Ns). NSNs and part numbers shall not be included in any text, tables, or illustration contained in a work package. NSN and part number information for all equipment, components and parts shall be accessible at any point in the presentation of WP text, tables and illustrations, when necessary, for the purpose of identification and parts ordering.

SUPERSEDES PAGE 46 OF MIL-STD-40051A

4.9.20.6 Equipment panel markings (placarding). Reference shall be made to panel markings and switch positions exactly as marked on the equipment. However, symbols on panel markings shall be spelled out when they cannot be produced by the software, composing equipment, or printers used in producing the manual, such as the symbol for ohm, infinity, etc.

4.9.20.7 Metric and U.S. standard measurements. Unless specified otherwise by the acquiring activity, all measurements shall be expressed in both U.S. standard units (e.g., ounces, pounds, gallons, inches, feet, knots, miles, etc.) and metric units. U.S. standard measurements shall be followed by the metric conversion in parentheses unless the equipment, instrument, or tool, etc., is calibrated in metric units. In that case, metric units shall be first, followed by the U.S. standard units. (For example, "169.5 Nm (125 lb-ft)".)

4.9.20.8 Temperature. Reference shall be made to temperature readings as calibrated on the equipment. If other than Fahrenheit, the equivalent in Fahrenheit shall follow in parentheses. General temperature references, such as room temperature, shall be given in degrees Fahrenheit (for example, 78°F).

4.9.20.9 Other TMs/IETMs. When it becomes necessary to reference to other work packages, descriptive information, maintenance tasks, or other data contained in another TM/IETM, it shall be by the TM number, as a minimum. The reference shall be linked when the referenced data is on the same CD or within the CD set for the system.

4.9.20.10 Tables. Tables shall be linked to the appropriate text and displayed when they do not already appear in the graphics client area on the user's EDS.

4.9.20.11 Figures. Figures shall be linked to the appropriate text or index number and displayed when they do not already appear in the graphics client area on the user's EDS.

4.9.20.12 Index numbers. Unless specified otherwise by the acquiring activity, index numbers shall be used in text to identify items and parts on illustrations. For example,

"Remove safety disc (3) and safety disc washer (4) from valve body (2)."

4.9.20.13 Items on diagrams. Reference shall be made to parts on diagrams by enough of their description or reference designator to identify the item (for example, resistor A6R11).

4.9.21 Equations. The use of equations shall be held to the minimum use required by the needs of the TM user.

NOTE

MATHPACK 911001 as included in MIL-PRF-28001 shall be used for preparing equations. The use of some equations may be limited by the Mathpack and the output system.

4.9.22 Nomenclature.

4.9.22.1 Nomenclature consistency and applicability. Nomenclature, other terms, and names shall be consistent within a manual and other directly related manuals. Statements that explain applicability for individual items of equipment shall use specific serial numbers, block designations, model designations, or similar identification. Such terms as "on later equipment" and "on early serial numbers" shall not be used.

4.9.22.2 Official/approved nomenclature. Unless specified otherwise by the acquiring activity, only approved names and official nomenclature shall be used. (Official nomenclature shall be the nomenclature used in the parts information database.) If unofficial nomenclature (common name) is approved, the common name shall be included in the parts information. Approved nomenclature shall be used wherever the use of a common name might be ambiguous.

4.9.22.3 Military terms. Military terms used shall be in accordance with Joint Pub 1-02, or any approved dictionary or glossary of Army military terms.

4.9.22.4 Automatic electronic test and checkout terminology. Terms used for automatic electronic test and checkout shall be in accordance with MIL-STD-1309.

4.9.23 Multimedia presentation. Audio, video, and animation techniques shall only be used in an IETM when it results in enhancing the presentation of the information or makes the procedures more effective. Every instance of use must be discussed with and approved by the acquiring activity before any audio, video, or animation presentation is included in an IETM. Multimedia standards to be used for presentation techniques will be specified by the acquiring activity.

4.9.24 Graphics.

4.9.24.1 Graphic format. All graphics developed in accordance with this standard shall be delivered in one of the three graphic formats: MIL-PRF-28003, Computer Graphic Metafile (CGM); MIL-PRF-28002, Continuous Acquisition and Life-cycle Support (CALS) Raster; or MIL-PRF-28000, Initial Graphics Exchange Specification (IGES). Other commercial graphic formats are acceptable if approved by the acquiring activity.

a. The CGM file format is the preferred graphics file format.

b. All graphics files for a particular IETM should be applied in the same graphics format if practical. Otherwise, files may be delivered in any combination of the allowable formats.

c. Appropriate header and identification information shall be included in each graphics file. Refer to the applicable specification for the specific requirements.

4.9.24.2 Types of graphics. As applicable, the following types of graphics shall be used in the preparation of IETMs. Preferred format of these graphics and typical examples are provided in MIL-HDBK-1222.

a. Line drawings.

b. Photographs.

c. Engineering drawings.

d. Diagrams.

e. Charts and graphs.

f. Tools and test equipment illustrations.

4.9.24.2.1 Line drawings. Line drawings including exploded views, locator views, and detailed views shall be used to support the operational, troubleshooting, and maintenance procedures. Examples of line drawings are provided in MIL-HDBK-1222.

a. When index numbers are used to locate and identify equipment components or parts, the index numbers shall be assigned sequentially (clockwise, disassembly, or in the order mentioned in text).

b. To assist the maintenance technician or operator in locating major components, controls and indicators, etc., locator views may be included.

c. When the illustration does not adequately or clearly depict the subject matter or part(s), specific detailed views may be included to support the main illustration.

4.9.24.2.2 Multiview illustrations. Multiview illustrations may be used to clarify, identify significant features, or further detail equipment assemblies, subassemblies, and detailed parts. Refer to MIL-HDBK-1222 for examples of multiview illustrations.

4.9.24.2.3 Digital Photographs. Digital photographs may be used for illustrations when a photograph provides for better clarity than a line drawing. If the intention is to use photographs in lieu of line art, it is preferred that a digital camera be used to produce the required photos.

4.9.24.2.4 Engineering drawings. Engineering drawings may be used with the approval of the acquiring activity. Engineering drawings are controlled documents and when used, they shall be used in their entirety, without modification. They must be reduced or redrawn to meet page size restrictions. When the controlled elements of an engineering drawing (i.e., title block, sources of supply, revision data, etc.) are removed, leaving only the “field” of the drawing, it is treated as a typical line drawing.

4.9.24.2.5 Diagrams.

4.9.24.2.5.1 Diagram specifications. Diagrams shall be prepared in accordance with the specifications listed below.

Subject	Equipment Covered	Specification
Abbreviations	All	ASME Y14.38
Drafting Practices	Mechanical, Electrical and Electronic	ANSI Y14.15-1966 (R1973)
Engineering Drawing Practices	All	MIL-STD-100
Graphic Symbols	Electrical and Electronic	IEEE 315A-86, IEEE 280-85
	Mechanical	MIL-STD-17
	Digital (Logic)	IEEE 91-84
	Fluid Power	ANSI Y32.10
Reference Designators	Electrical and Electronic	IEEE 200-75

SUPERSEDES PAGE 49 OF MIL-STD-40051A

Unit Symbols	All	IEEE 260-78
Logic	All	IEEE 91-84

4.9.24.2.5.2 Types of diagrams. The following types of diagrams may be included in the IETM. Refer to MIL-HDBK-1222 for examples of types of diagrams. Additionally, when authorized by the acquiring activity, specific types of diagrams such as schematic and wiring diagrams may also be provided in a paged-based paper format.

a. Block diagrams.

b. Schematic diagrams.

c. Pictorial diagrams.

d. Cutaway diagrams.

e. Logic diagrams.

f. Wiring diagrams/wire lists.

g. Cable diagrams.

h. Piping diagrams.

i. Test setup diagrams.

4.9.24.2.6 Tools and test equipment illustrations. Only uncommon or unusual uses and connections for test purposes shall be illustrated if it is essential to do so to avoid misunderstanding. Unusual operations shall also be illustrated. Special tools and test equipment shall be illustrated, as applicable. Standard tools and test equipment shall not be illustrated, nor shall self-evident or generally known uses be shown.

4.9.24.3 Elements of illustrations.

4.9.24.3.1 Border rules and boxes. Border rules and boxes shall not be used for single illustrations, but are used to separate multisection illustrations on the same page or for locator/detail views. (Refer to MIL-HDBK-1222 for an example of border rules and boxes.)

4.9.24.3.2 Use of the human figure. When necessary, illustrations may include a human figure or parts of the body. The illustrated human figure shall not obscure necessary details of the item(s) being illustrated.

4.9.24.3.3 Credit lines.

a. The photographer's or illustrator's name shall not appear on any illustration.

b. A manufacturer's name, symbol, or trademark shall not appear on illustrations for the purpose of identifying the illustration.

4.9.24.3.4 Callouts. Index numbers, reference designators, nomenclature, leader lines, sweep arrows, legends, and other identifiers shall be used, when necessary, to identify significant features. When hotspot techniques are used in conjunction with callouts, an explanation shall be provided in the “how to use” portion of the IETM. Refer to MIL-HDBK-1222 for examples of the use of these types of identifiers.

REPRINTED WITHOUT CHANGE

4.9.24.3.4.1 Index numbers. When used, index numbers start with Arabic numeral 1 and continue consecutively.

a. If an item that already has been assigned an index number is used in more then one illustration in that task series, it must retain the same index number.

b. Index numbers shall be in clockwise sequence (beginning at 11 o'clock), disassembly sequence, or in order of mention in the text.

c. All items shown as exploded shall be identified. Items drawn in phantom need not be identified.

d. Index numbers shall not be contained within circles unless required for a specific reason in MIL-STD-40051A.

4.9.24.3.5 Leader lines and arrowheads. Leader lines shall be uniform, short, and as straight as possible; avoid the use of dogleg-shaped lines unless absolutely necessary. Arrowheads may be added for clarity. Do not allow leader lines to touch the callout. Do not allow arrowheads to enter the object to which they apply. If it is necessary to enter the object to provide for greater clarity, a breakoff symbol shall be used in lieu of an arrowhead.

4.9.24.3.6 Illustration legends. Illustration legends shall not be used.

4.9.24.3.7 Procedures on illustrations. Procedural steps shall not be placed on illustrations.

4.9.24.4 Graphic techniques. In addition to the graphic techniques provided in 4.9.24.4.1 through 4.9.24.4.5, refer to MIL-HDBK-1222 for suggested graphic techniques used for the preparation of U.S. Army IETMs.

4.9.24.4.1 Illustration figure numbers. Figure numbers for illustrations contained in work packages may be used.

4.9.24.4.2 Illustration figure titles. Figure titles for illustrations shall not be used.

4.9.24.4.3 Illustration identification numbers. Each illustration shall be assigned a unique identification number provided by the proponent activity. Contractor's identification number may be used when approved by the proponent activity.

4.9.24.4.4 Portraying signal flow. Signal flow, especially for electrical and electronic equipment, critically affects the understandability of diagrams. To assist the IETM user in following the diagram, where possible, major signal or pressure flow shall be from left to right, and feedback or return flow shall be from right to left. Animation or color may be used to indicate signal flow.

4.9.24.4.5 Color in illustrations. Color may be used when it will enhance the understanding of the data. The use of some colors may not be appropriate for certain environmental conditions. The following color limitations shall apply.

a. Red shall not be used if the IETM will be used in Red Light conditions such as in a tank or shelter.

b. For IETMs that may be displayed on a monochrome system, reverse video and/or underlining shall be used for hotspots rather than color.

c. The use and choice of colors shall be as specified by the acquiring activity.

4.10 Changes/Revisions. When updates to technical manuals are ordered the deliverable product shall be changed pages/work packages or a complete revision of the TM. The acquiring activity will determine the type of update required.

4.10.1 Changes for page-based TMs. A change is used to incorporate appropriate new information (for example, MAC changes, Modification Work Orders (MWO), engineering drawing changes, DA Forms 2028, etc.) into the basic TM (or previous edition) or clarifies, corrects, or improves existing information in the TM. The change will be written in the same style and format as the basic manual.

4.10.1.1 Changes. Changes shall consist of a change transmittal page and the applicable change pages and/or work packages. For the content and format of a change transmittal page, refer to figure 11.

a. Each change to a TM shall be numbered in sequence beginning with 1.

b. Front matter, work package, and rear matter change pages shall conform to the style and format of the basic TM and shall incorporate all approved information.

c. Changes to front and rear matter pages and all pages of a changed work package shall include the applicable change number located on the outer edge of the page opposite the binding side.

4.10.1.2 Changed work packages. When updates to a work package are made, the entire work package shall be revised and reissued.

4.10.1.3 Changed front and rear matter pages. When updates to the front and rear matter of a TM are required, only the effected pages shall be revised and reissued. Copy shall be prepared for both sides of the printed page on which an update is made, even when an update is made to one side only.

4.10.1.4 Change symbols. Change symbols shall be inserted to identify technical updates in text, illustrations and tables.

a. Updates to the text and tables shall be indicated by a vertical line (change bar) opposite the updated, deleted, or added text (except as noted below). The change bar shall be placed in the margin opposite the binding edge. Exception: Pages with emergency markings (black diagonal lines around three edges) shall have the change bars placed along the inner margins.

b. When tables are updated or added, the change bar shall also be placed to the left of the table number and title.

c. The method(s) used shall be explained in the change transmittal page.

d. Change symbols from a previous change shall be deleted when a page is subsequently updated. Symbols shall show current updates only.

e. If the composing equipment is incapable of producing a vertical line, another symbol may be used as specified by the acquiring activity (for example, a number sign "#;" plus sign "+;" black circle; black square; the letters "C," "R," or "X").

f. Change symbols are not required for the following.

(1) Indexes and tabular data where the update cannot be identified.

(2) Blank space resulting from the deletion of text, an illustration, part of an illustration, or a table.

(3) Correction of minor inaccuracies, such as spelling, punctuation, relocation of material, renumbering, etc., unless such correction changes the meaning of the information.

4.10.1.5 Change symbols for illustrations. Unless specified otherwise by the acquiring activity, a miniature pointing hand shall be used for illustrations (other than diagrams and schematics) to highlight the area containing the changed information.

a. Changes confined to the same general area shall be indicated only once on the illustration.

b. A vertical line next to changed text and callouts on illustrations may be used in lieu of a pointing hand.

c. A vertical line next to changed material may be used on a chart or graph.

d. If a callout is deleted from an illustration, the word "DELETED" shall be placed after the appropriate number in the legend, if applicable. If a callout is deleted from an illustration without a legend, such as those used to supplement a RPSTL, the word "DELETED" shall be placed on the illustration at the end of the leader line. NOTE: Consideration should be given to showing the callout with a strikeout to indicate that it has been deleted.

e. When an illustration is changed, index numbers added between existing numbers shall be the same as the preceding index number with added alpha characters (e.g., 22A, 22B). This system shall also be used in basic manuals when errors are discovered so late in preparation that renumbering of all following index numbers would delay submittal. Index numbers with added alpha characters shall be eliminated for a complete revision.

f. As specified by the acquiring activity, screens (shading), screened (shaded) boxes, or miniature pointing hands shall be used to highlight updated areas of diagrams and schematics.

g. When a figure has a figure number and title, a vertical line shall be placed to the left of the figure number and/or title.

4.10.1.6 Changes to RPSTL supporting information work packages and TMs. Requirements shall apply with the following exceptions.

a. Deleted figures and items. When figures and items have been deleted, the cross-reference indexes work packages shall be changed as necessary.

b. Item changes. Unless specified otherwise by the acquiring activity, an asterisk shall be placed to the left of the item no. column in the list adjacent to the line item indicating that an update has been made to the item and is reflected in the associated text, illustration, P/N index, or reference designator index.

4.10.2 Complete revisions for page-based TMs. A complete revision requires rewrite and reorganization of the technical content of the data. All existing changes to the basic manual will be merged. All change dates and change symbols will be removed and, if necessary, all work packages will be assigned new WP sequence numbers in consecutive order. If the last two digits of a WP sequence number was used for expansion during a previous change cycle, they should be recycled to 00. (i.e., if WP 0034 01 and WP 0034 02 were inserted between WP 0034 00 and WP 0035 00, WP 0034 01 should be renumbered 0035 00, WP 0034 02 should be renumbered 0036 00 and WP 0035 00 should be renumbered 0037 00).

4.10.3 Revisions for frame-based TMs.

a. Each revision to a IETM shall be identified by a revision date.

b. When updates to a IETM are made, the entire IETM shall be revised and reissued.

c. When an IETM is revised and reissued, revision summay information shall be included (Refer to 5.4.1.3).

4.10.3.1 Revision symbols. Revision symbols shall be inserted to identify technical updates in text, illustrations and tables.

a. Updates to the text and tables shall be indicated by a vertical line (revision bar) opposite the updated, deleted, or added text (except as noted below). If the composing equipment is incapable of producing a vertical line, another symbol may be used as specified by the acquiring activity (for example, a number sign "#;" plus sign "+;" black circle; black square; the letters "C," "R," or "X").

b. When tables are updated or added, the revision bar shall also be placed to the left of the table title.

c. Revision symbols from a previous revision shall be deleted when a page is subsequently updated. Symbols shall show current updates only.

d. Revision symbols are not required for correction of minor inaccuracies, such as spelling, punctuation, relocation of material, renumbering, etc., unless such correction changes the meaning of the information.

e. A revision symbol such as a “C” shall be included for each revised work package in the list of contents.

f. A revision symbol such as a “C” shall appear with the work package title in the title bar area.

4.10.3.2 Revision symbols for illustrations. Unless specified otherwise by the acquiring activity, a miniature pointing hand shall be used for illustrations (other than diagrams and schematics) to highlight the area containing the revised information.

a. Revisions confined to the same general area shall be indicated only once on the illustration.

b. A vertical line next to revised callouts on illustrations may be used in lieu of a pointing hand.

c. A vertical line next to revised material may be used on a chart or graph.

f. As specified by the acquiring activity, screens (shading), screened (shaded) boxes, or miniature pointing hands shall be used to highlight updated areas of diagrams and schematics.

g. When a figure has a figure title, a vertical line shall be placed to the left of the figure number title.

5. DETAILED REQUIREMENTS.

5.1 Technical content preparation. Technical manual data developed in accordance with this standard shall be task oriented and fully consistent with the maintenance concepts derived from the baseline documents described below.

a. Logistic Support Analysis Record (LSAR). The technical data and instructions developed by the requirements of Logistics Support Analysis/Logistic Management Information and Department of Defense (DoD) Requirements for a Logistic Support Analysis Record (LSAR), (including the maintenance allocation chart (MAC)) shall be used as the baseline to prepare TMs.

b. MAC. For equipment that does not have LSAR data available, either a Preliminary Maintenance Allocation Chart (PMAC) or the MAC shall be used as the baseline to prepare TMs.

c. TB 750-93-1. If a waiver of standard requirements is granted by the acquiring activity, TB 750-93-1 may be used as the baseline for preparing TMs.

d. Additional source data. Available engineering drawings shall be used with the other required data. Sound engineering principles and techniques, available engineering analyses, service experience, performance data on the item and on similar items, and all other Reliability, Maintainability, Supportability (RMS) and Operational Availability (Ao) data available shall be used in the preparation of specific instructions.

5.2 Introductory information preparation. Requirements for the preparation of introductory and planning information for page-based technical manuals are provided in 5.3. Requirements for the preparation of introductory and planning information for frame-based technical manuals are provided in 5.4

5.3 Preparation of front and rear matter for page-based TMs. Requirements for the preparation of front and rear matter necessary to supplement the technical content chapters and associated work packages in MIL-STD-40051-1A through MIL-STD-40051-6A are provided in 5.3.1 and 5.3.2. Appendix A, Technical Manual Content Selection Matrixes provides detailed assembly and content requirements for all TMs covering operation, maintenance, and parts information, at all maintenance levels through depot.

5.3.1 Front matter **<frnt>**. As applicable, material preceding the first text page shall consist of the following in the order specified below.

a. Front cover **<frntcover>**.

b. Warning summary **<warnsum>**.

c. Change transmittal page **<chgsheet>**.

d. List of effective pages/work packages **<loepwp>**.

e. Title block page **<titleblk>**.

f. Table of contents **<contents>**.

g. "How To Use This Manual" information **<howtouse>**.

h. Troubleshooting introduction work package <**tsintrowp**>. **(Troubleshooting TMs only.)**

i. General information work package **<ginfowp>**.

j. General information work package **<pms-ginfowp> (Preventive Maintenance Services Manual only)**.

k. General information work package <**pm-ginfowp**> **(Phased Maintenance Manual only)**.

5.3.1.1 Front cover **<frntcover>**. A front cover shall be prepared for each TM and DMWR. The formats of the front covers are shown in figure 7 (TM), figure 8 (Phased Maintenance and Preventive Maintenance Services TMs), and figure 9 (DMWR). The front cover shall contain the following content information.

a. Security classification (when required).

b. TM number **<tminfono>**.

c. TM title **<prtitle>**.

d. National stock number (NSN) **<nsn>** for item(s) covered.

e. End Item Code (EIC) **<eic>**, as specified in the Army Master Data File (AMDF).

f. Subtitle when required **<stitle>**.

g. Equipment illustration when required **<graphic>**.

h. Availability statement (**depot only**) **<avail>**.

i. Supersedure notice for revisions only **<super>**.

j. Disclosure notice **<disclos>**.

k. Distribution statement **<dist>**.

l. Export control notice warning **<export>**.

m. Destruction notice **<destr>**.

n. Service nomenclature **<servnomen>**.

o. TM date.

p. Change designator **<chgno>** and date **<chgdate>**.

q. Reproduction notice <**reprod**> (**depot only**).

r. Distribution restriction <**dist**> (**depot only**).

Additional detailed requirements for the above front cover content information are described in 5.3.1.1.1 through 5.3.1.1.8.

5.3.1.1.1 TM number for joint service TMs. If the manual is jointly used, each Service's number shall be placed on the front cover and only the proponent activity's TM number shall be placed on each page within the TM. The numbers shall be prefixed with the word Air Force, Army, Marine Corps, or Navy (NAVSEA or NAVAIR), as applicable. The acquiring activity's (proponent activity's) name **<servbranch>** and manual number **<tmno>** shall be placed first. The TM number(s) for the other Services shall be in alphabetical sequence following the acquiring activity's name and manual number. For example,

"ARMY	TM 11-1510-204-34
AIR FORCE	TO 21M-LGM30G-12
MARINE CORPS	TM 12345A-15/1
NAVY (NAVAIR)	AI-F18AA-WRM-070
NAVY (NAVSEA)	SE211-FA-MMA-010/SPS-10A"

5.3.1.1.2 Availability statement **(depot only) <avail>**. For DMWRs only, the front cover shall contain the following availability statement: "This publication is not available through the AG publications centers. This publication is available through *(insert the name and address of the proponent activity)*."

5.3.1.1.3 Disclosure notice **<disclos>**. Unless specified otherwise by the acquiring activity, the following disclosure notice shall be placed on the front cover of all classified and unclassified TMs, except those with distribution statement A: "This information is furnished upon the condition that it will not be released to another nation without the specific authority of the Department of the Army of the United States, that it will be used for military purposes only, that individual or corporate rights originating in the information, whether patented or not, will be respected, that the recipient will report promptly to the United States, any known or suspected compromise, and that the information will be provided substantially the same degree of security afforded it by the Department of Defense of the United States. Also, regardless of any other markings on the document, it will not be downgraded or declassified without written approval of the originating United States agency."

5.3.1.1.4 Distribution statement **<dist>**. All TMs shall have a distribution statement placed on the front cover for each manual or revision. (Refer to figure 7.) The appropriate distribution statement shall be provided by the acquiring activity as selected from DOD 5230.24.

5.3.1.1.5 Destruction notice **<destr>**. All TMs marked with distribution statements "B", "C", "D", "E", "F", or "X" shall be marked with the destruction notice provided by the acquiring activity from DoD 5230.24. (Refer to figure 7.)

5.3.1.1.6 TM date. TMs shall be dated. The TM date shall be the date at which the last material to be included was received (copy freeze date, provided by the acquiring activity). The day, month, and year shall be given in that sequence (for example, 10 JULY 1998). (Refer to figure 7.)

5.3.1.1.7 Change designator and date **<chgno> <chgdate>**. When updates are prepared, the change designator and date shall be shown on the front cover (refer to figure 7), the title block page, and the change sheet. Unless specified otherwise by the acquiring activity, the change date shall be the date at which the material to be included was received (copy freeze date, provided by the acquiring activity).

5.3.1.1.8 For Army communications security (COMSEC) manuals use. Unless specified otherwise by the acquiring activity, unclassified TMs shall contain the notice FOR OFFICIAL USE ONLY. The notice shall be placed at the bottom center of the front cover and all TM pages. Classified COMSEC TMs shall be appropriately marked at the level of classification.

5.3.1.2 Warning summary (including first aid data) **<warnsum>**. A warning summary shall be prepared for all TMs containing warnings. The warning summary shall appear on the first right-hand page immediately after the front cover. The warning summary shall include each general type of warning and warning symbol **<warninfo>** and hazardous materials warnings **<hazmat>**. Refer to MIL-HDBK-1222 for a typical example of a warning summary.

5.3.1.2.1 Preventive maintenance services and phased maintenance inspection manuals warning data **(aviation only)**. For preventive maintenance services and phased maintenance inspection only, the warning data front page shall contain the TM number, service nomenclature, TM date, TM title and the following verbatim statement (Refer to figure 10).

"**WARNING**

Certain inspections are Mandatory Safety-of-Flight requirements, and the inspection intervals cannot be exceeded. In the event these inspections cannot be accomplished at the specified interval, the aircraft condition status symbol will be changed to a red X. Mandatory Safety-of-Flight inspection items are printed in bold face type.

NOTE

Inspection items contained in this manual are considered the minimum requirements for performing phased maintenance and must be performed. The cumulative effects of inspection deferrals are unknown and could result in catastrophic failure or increased maintenance at a later date. Therefore, the use of special lettering to emphasize Mandatory Safety-of-Flight Items is not to be construed as authority for deferral of other inspections."

5.3.1.3 Change transmittal page **<chgsheet>**. A change transmittal page shall be prepared and accompany each change to a TM. The change transmittal page shall not be page numbered and shall be located following the warning summary, or, the list of effective pages/work packages, if included. (Refer to figure 11).

5.3.1.4 List of effective pages/work packages <**loepwp**>. A list of effective pages/work packages shall be prepared in accordance with figure 12. The list of effective pages/work packages shall be prepared and transmitted with the basic version of the TM and each subsequent change or revision. It shall be located immediately following the warning summary.

5.3.1.5 Title block page **<titleblk>**. A title block page (Refer to figure 13) shall be prepared and follow the list of effective pages/work packages. The title block page shall include the reporting errors and recommended improvements statement **<reporting>**. For RPSTLs, the "current as of" date shall be inserted. When depot level repair parts are included in a lower level RPSTL, the following statement shall be added to the RPSTL title: "(Including Depot Maintenance Repair Parts)."

5.3.1.5.1 Reporting errors and recommending improvements statement **<reporting>**. A reporting errors and recommending improvements statement (Refer to figure 13) shall appear below the prime title, NSN, EIC, and subtitle (if any) on the title block page. The mailing address, e-mail address and fax number of the responsible proponent shall be inserted in the statement.

a. Unclassified/standard TM. Except for classified TMs, oversize TMs, pocket size TMs, and TMs with less than eight pages, the following statement shall precede the table of contents title.

"**REPORTING ERRORS AND RECOMMENDING IMPROVEMENTS**

You can help improve this manual. If you find any mistakes or if you know of a way to improve the procedures, please let us know. Mail your letter or DA Form 2028 (Recommended Changes to Publications and Blank Forms), located in the back of this manual direct to: (*name and address of proponent*). You may also send in your recommended changes via electronic mail or by fax. Our fax number is (*insert DSN and commercial number of proponent*). Our e-mail address is (*insert address of proponent*). A reply will be furnished to you."

b. Pocket size TMs, oversize TMs, and TMs with less than eight pages. For pocket-size TMs, oversize TMs, and TMs with less than eight pages, the following statement shall precede the table of contents title.

"**REPORTING ERRORS AND RECOMMENDING IMPROVEMENTS**

You can help improve this manual. If you find any mistakes or if you know of a way to improve the procedures, please let us know. Mail your letter or DA Form 2028 (Recommended Changes to Publications and Blank Forms) direct to: *(name and address of proponent*). You may also send in your recommended changes via electronic mail or by fax. Our fax number is (*insert DSN and commercial number of proponent*). Our e-mail address is (*insert address of proponent*). A reply will be furnished to you."

c. Classified TMs. For classified TMs, the following statement shall precede the table of contents title:

"**REPORTING ERRORS AND RECOMMENDING IMPROVEMENTS**

You can help improve this manual. If you find any mistakes or if you know of a way to improve this manual, write and tell us about it. Address your correspondence to (*name and address of proponent*). When dealing with classified information, make sure that your correspondence is properly marked and is handled in accordance with current security regulations."

5.3.1.6 Table of contents **<contents>**. A table of contents listing chapters and work packages in the same order and with the exact titles as used in the body text shall be prepared for all TMs. The content and format of the table of contents is shown in figure 14. When space permits, the table of contents shall begin on the title block page (Refer to 5.3.1.5) below the reporting of errors and recommending improvements statement. If space does not permit, the table of contents shall begin on a right-hand page following the title block page.

a. The security classification, if any, of chapters and work packages shall be indicated.

b. Each volume of a multivolume manual shall contain its own table of contents and shall reference companion volumes for the same TM. Volume 1 shall contain a complete table of contents covering the entire set. Entries shall indicate the volume in which the referenced material appears for example, Operator Instructions, Vol 1.

c. The following requirements are applicable to a RPSTL table of contents.

(1) Titles of RPSTL work packages, including the Functional Group Codes (FGCs) as applicable, shall be listed by the same nomenclature and in the same sequence in which they appear in the tabular listings. The WP sequence number shall be referenced with each WP title. (Refer to figure 15.)

(2) NSN, P/N and (as applicable) reference designator cross-reference indexes shall be listed.

(18) Only the work packages applicable to the maintenance level(s) for which the RPSTL is prepared shall be listed.

(4) The table of contents shall begin on a separate, right-hand page.

5.3.1.7 "How To Use This Manual" information **<howtouse>**.

a. "How to Use This Manual" information shall be located after the table of contents and before the first chapter of the TM. "How to Use This Manual" information shall begin on a separate, right-hand page.

b. Information to familiarize the user with special or unusual features of the TM shall be prepared. Coverage shall lead the user through the TM and explain important features of the organization and content. For example, the format is explained; operating, troubleshooting, Preventive Maintenance Checks and Services (PMCS) are explained; and repair, maintenance instructions, and other pertinent information are explained.

c. Any peculiarities in the basic arrangement of the TM shall be described. "How To Use This Manual" information shall not repeat instructions given within the chapters and/or work packages.

d. For all TMs (excluding operators) the "How To Use This Manual" information shall include reference to the associated RPSTL and an explanation on how to use the RPSTL in conjunction with the manual.

e. For all TMs with a glossary, reference to the glossary shall be made and an explanation of its features and use shall be provided.

f. For **troubleshooting TMs**, an explanation on how troubleshooting data is presented in the TM shall be included. The explanation shall explain how failure symptom indexes and malfunction codes correspond to maintenance operational checks and troubleshooting procedures for individual systems and components. If necessary, for multi-volume troubleshooting TMs, examples of the troubleshooting process shall be provided to illustrate how specific troubleshooting volumes and work packages are used together to locate and isolate faults.

5.3.1.7.1 International standardization agreements. When specified by the acquiring activity, the "How To Use This Manual" information shall contain the following.

"NOTE

Certain provisions of this technical manual (*identify by chapter, work package, paragraph, or similar manner, if appropriate*) are the subject of international standardization agreement (*insert the ABCA or ASCC standard number; the NATO, STANAG, NETR, or NEPR number; or appropriate documentary reference*). When revision or cancellation of this technical manual is proposed which will modify the international agreement concerned, the technical manual management activity will take appropriate action through international standardization channels, including departmental standardization offices, to change the agreement or make other appropriate accommodations."

5.3.1.8 Introduction work package (**Troubleshooting TMs only**) <**tsintrowp**>. This work package shall describe the testing and troubleshooting process used to perform troubleshooting and shall include information on the methods used to perform troubleshooting. The general flow of the troubleshooting process shall be described and the general methods used to perform testing and troubleshooting shall be included. Any information peculiar to troubleshooting electrical subsystems and electronic equipment shall also be described. If a troubleshooting index (Refer to MIL-STD-40051-3A) is used, an explanation of the index shall be provided.

5.3.1.9 General information work package <**ginfowp**>. This work package shall contain the requirements provided in 5.3.1.9.1 through 5.3.1.9.24, as applicable, for the weapon system/equipment.

5.3.1.9.1 Scope <**scope**>. A brief statement shall be prepared to tell what is covered in the TM. As applicable, the following information shall also be included.

a. Type of manual.

b. Model number(s) and equipment name(s).

c. Purpose of equipment.

d. Special inclusions in the manual, such as drill procedures or on-vehicle loading plans.

5.3.1.9.2 Maintenance forms, records, and reports <**mfrr**>. The following statement shall be included.

"MAINTENANCE FORMS, RECORDS, AND REPORTS

Department of the Army forms and procedures used for equipment maintenance will be those prescribed by (as applicable) DA PAM 738-750, Functional Users Manual for the Army Maintenance Management System (TAMMS); DA PAM 738-751, Functional Users Manual for the Army Maintenance Management Systems - Aviation (TAMMS-A); or AR 700-138, Army Logistics Readiness and Sustainability."

In addition, for **conventional and chemical ammunition TMs**, add the following statement.

"Accidents involving injury to personnel or damage to material will be reported on DA Form 285 (Accident Report) in accordance with AR 385-40. Explosives and ammunition malfunctions will be reported in accordance with AR 75-1."

When applicable, add references to SB 742-1, Ammunition Surveillance Procedures.

5.3.1.9.3 Reporting equipment improvement recommendations **<eir>**. The following statement shall be included.

"REPORTING EQUIPMENT IMPROVEMENT RECOMMENDATIONS (EIR)

If your (insert equipment short item name) needs improvement, let us know. Send us an EIR. You, the user, are the only one who can tell us what you don't like about your equipment. Let us know why you don't like the design or performance. Put it on an SF 368 (Product Quality Deficiency Report). Mail it to the address specified in DA PAM 738-750, Functional Users Manual for the Army Maintenance Management System (TAMMS), or as specified by the acquiring activity. We will send you a reply."

5.3.1.9.4 Hand receipt (HR) manuals **<handreceipt>**. The following statement may be included in operator's/unit maintenance manuals.

"HAND RECEIPT (HR) MANUALS

This manual has a companion document with a TM number followed by "-HR" (which stands for Hand Receipt). TM X-XXXX-XXX-10-HR consists of preprinted hand receipts that list end item related equipment (i.e., COEI, BII, and AAL) that must be accounted for. As an aid to property accountability, additional HR manuals may be requisitioned through normal publication channels."

5.3.1.9.5 Corrosion prevention and control **<cpcdata>**. A statement similar to the following shall be prepared.

"CORROSION PREVENTION AND CONTROL (CPC)

Corrosion Prevention and Control (CPC) of Army materiel is a continuing concern. It is important that any corrosion problems with this item be reported so that the problem can be corrected and improvements can be made to prevent the problem in future items.

While corrosion is typically associated with rusting of metals, it can also include deterioration of other materials, such as rubber and plastic. Unusual cracking, softening, swelling, or breaking of these materials may be a corrosion problem.

If a corrosion problem is identified, it can be reported using SF 368, Product Quality Deficiency Report. Use of key words such as "corrosion," "rust," "deterioration," or "cracking" will ensure that the information is identified as a CPC problem.

The form should be submitted to the address specified in DA PAM 738-750, Functional Users Manual for the Army Maintenance Management System (TAMMS)."

For **aircraft TMs**, this information shall include a reference to TM 55-1500-343-23 (Organizational and Intermediate Avionic Cleaning and Corrosion Prevention/Control).

5.3.1.9.6 Ozone depleting substances (ODS) **<odsdata>**. The continued use of ODS has been prohibited by Executive Order 12856 of 3 August 1993. The use of ODS in Army IETMs is prohibited. A listing of these substances will be provided by the acquiring activity.

5.3.1.9.7 Destruction of Army materiel to prevent enemy use **<destructmat>**. Reference shall be made to the appropriate TM(s) covering the destruction of Army materiel to prevent enemy use as provided by the proponent activity.

5.3.1.9.8 Preparation for storage or shipment **<pssref>**. Reference shall be made to the preparation for storage or shipment procedures, including packaging and administrative storage, found in the applicable maintenance instructions work package.

5.3.1.9.9 Warranty information **<wrntyref>**. When the TM covers equipment that is under warranty and a Warranty Technical Bulletin (WTB) is published, the applicable WTB shall be referenced. When a WTB is not published, the following statement shall be included.

"WARRANTY INFORMATION

The (insert name of equipment) is warranted for (insert miles or other timeframe as appropriate). The warranty starts on the date found in block 23 of DA Form 2408-9, Equipment Control Record. Report all defects to your supervisor, who will take appropriate action."

5.3.1.9.10 Nomenclature cross-reference list **<nomenreflist>**. A cross-reference list shall be prepared when unofficial nomenclature (common name) is approved by the proponent activity.

5.3.1.9.11 List of abbreviations/acronyms **<loa>**. A list shall be prepared, consisting of all abbreviations, acronyms, signs, or symbols used in the TM. For **aircraft TMs only**, a statement shall be prepared that abbreviations are in accordance with ASME Y14.38, except when the abbreviation stands for a marking actually found in the aircraft.

5.3.1.9.12 Quality Assurance (QA) **(depot and aviation only) <qainfo>** . When specified by the acquiring activity, reference shall be made to the pertinent QA TM(s) or include the appropriate general QA information. If QA information is not referenced but is included in the TM, it shall be stated that the text of each quality assurance procedure or step in the TM is preceded (and highlighted) by the addition of "**QA**." The abbreviation "QA" shall be defined either in a note or in the text. For **aircraft maintenance TMs**, include a reference to FM 1-500.

5.3.1.9.13 Quality of material **<qual.mat.info>**. A statement(s) similar to the following shall be included:

“Material used for replacement , repair, or modification must meet the requirements of this manual. If quality of material requirements are not stated in this manual, the material must meet the requirements of the drawings, standards, specifications, or approved engineering change proposals applicable to the subject equipment.”

5.3.1.9.14 Safety, care, and handling **<sftyinfo>**. The following general precautions and safety regulations shall be prepared.

a. For **ammunition TMs**, information shall be prepared to comply with AR 385-62. References to applicable Army Regulations (ARs) for range safety and danger zones during training and combat shall be included. Explanations and official definitions shall be prepared for such safety-related terms as "misfire," "hangfire," and "cook-off," which describe characteristics associated with the specific items(s) covered by the TM under preparation. A reference to AR 385-64 and DA PAM 385-64 shall be made for general ammunition care, handling, and safety.

b. For TMs covering equipment with radioactive parts or components, information shall be prepared to comply with Nuclear Regulatory Commission provisions, and references to applicable ARs and safety TMs on radioactive materials shall be included. If additional coverage on radioactive materials is needed, but is not included in applicable TMs, instructions shall be prepared as required. In addition, the following information shall be prepared for inclusion throughout the TM.

(1) Nuclear warning notices shall be placed at the beginning of any instruction covering procedures that will expose personnel to a nuclear radiation hazard.

(2) Procedures to be followed prior to maintenance actions, or in the event of breakage of radioactive parts or components, including safety, care, and handling instructions.

(3) Radioactive parts or components shall be shown and identified on a parts location diagram or illustration, and warning notices.

(4) A list of radioactive parts or components and the type and quantity of radioactive material involved shall be included as part of equipment data. (Refer to MIL-STD-40051- 1A.)

(5) Instructions for the disposal of radioactive material, such as the requirement to double bag all broken tritium sources in plastic.

c. Electrostatic Discharge (ESD) control standards for the protection of electrical and electronic parts, assemblies, and equipment shall be prepared. The ESD classes shall be identified. (Refer to MIL-STD-1686 and MIL-HDBK-263 which contains ESD control procedures and material necessary to protect these items.) (For classifications of ESD marking procedures, refer to 4.8.20.)

d. For **DMWRs**, when applicable, reference shall be made to the electromagnetic compatibility standards (e.g., MIL-STD-461 and MIL-STD-462) that apply to the equipment covered in the DMWR.

5.3.1.9.15 Nuclear hardness <**hcp**>. If equipment covered in the TM has nuclear survivability requirements (i.e., overpressure and burst, thermal radiation, electromagnetic pulse, or transient radiation effects on electronics), it shall be so stated. (Refer to 4.8.19 for marking Hardness Critical Process (HCP) procedures.) The following statement shall be included:

"NUCLEAR HARDNESS

All hardness critical procedures in this manual are marked with the acronym **HCP** as follows:

1. When an entire task, including all paragraphs and procedures, is considered hardness critical, only the task title will be marked by the acronym **HCP**, placed before the title.

2. When only certain processes and steps within the work package are hardness critical, only the applicable processes and steps will be marked by placement of the acronym **HCP** between each applicable step number and the text."

5.3.1.9.16 Security measures for electronic data <**secref**>. Instructions for handling, loading, purging, overwriting, or unloading classified electronic data under usual or unusual conditions, shall be developed. Instructions shall meet the requirements of current regulations as they pertain to automation security.

5.3.1.9.17 Calibration <**calref**>. Equipment requiring calibration shall be identified, and reference shall be made to the publication containing the applicable calibration procedure.

REPRINTED WITHOUT CHANGE

5.3.1.9.18 Engineering Change Proposals (ECPs) **(depot only) <ecp>**. The following statement shall be included:

"ENGINEERING CHANGE PROPOSALS

Engineering Change Proposals (ECPs) will be submitted using DD Form 1693 (Engineering Change Proposal [Short Form]). (Refer to MIL-STD-973, Configuration Management, for instructions.) Completed forms should be mailed directly to (enter the name and address of the responsible command or activity). A reply will be furnished to you."

5.3.1.9.18.1 Modification Work Order (MWO) and Engineering Change Proposals (ECPs) list **(depot only)**. MWOs and ECPs shall be identified for all modifications which have been incorporated into the work required by the DMWR. MWOs shall be reported as outlined in DA PAM 738-50. The applicable MWOs and the ECPs shall be listed (title and number). This listing shall be supplied by the major subordinate command (MSC).

5.3.1.9.19 Deviations and exceptions **(depot only) <deviation>**. The following statement shall be included:

"DEVIATIONS AND EXCEPTIONS

Requests for deviations or exceptions to this Depot Maintenance Work Requirement (DMWR) will be processed in accordance with ISO 9000 Series standards, or equivelent."

5.3.1.9.20 Mobilization requirements **(depot only) <mobreq>**. The following statement shall be included:

"MOBILIZATION REQUIREMENTS

All requirements of this DMWR will be exempted or revised in the event of mobilization. Only those procedures necessary to return the (insert equipment name) to a serviceable condition will be performed. The exemptions and revisions are explained in supporting information work package (insert appropriate work package sequence number)."

5.3.1.9.21 Flight safety critical aircraft parts (FSCAP) **<fscapreq>**. The following statement shall be included:

"FLIGHT SAFETY CRITICAL AIRCRAFT PARTS (FSCAP)

A flight safety critical aircraft part is defined as any part, assembly, or installation whose failure, malfunction, or absence could cause loss of aircraft, serious damage to aircraft, death of crewmembers, or serious injury to crewmembers.

A critical characteristic is defined as any feature throughout the life cycle of a FSCAP, such as dimension, tolerance, finish, material or assembly, manufacturing process, inspection process, operation, field maintenance requirement, depot overhaul requirement, or other feature that if nonconforming, missing, or degraded, could cause failure or malfunction of a FSCAP.

5.3.1.9.22 Cost considerations **(depot only)** <**cost**>. The following statement shall be included:

"COST CONSIDERATIONS

This work requirement shall be the basis for establishing the extent of overhaul while taking into consideration cost factors. A determination shall be made on all subassemblies/assemblies to replace worn or damaged components which are available in supply, if acquisition cost is less than the cost to repair and restore to the DMWR standard. The cost to repair/restore any individual item with an established Maintenance Expenditure Limit (MEL) to the DMWR standard shall not exceed the MEL, unless a waiver has been approved in accordance with AMC-R 750-51. This requirement does not apply to items exempted from MEL in accordance with AMC-R 750-51."

5.3.1.9.23 Copyright credit line **<copyrt>**. When a copyright credit line is required, the information shall appear as the last paragraph of the general information work package.

5.3.1.9.24 Supporting information for repair parts, special tools, TMDE, and support equipment **<supdata>**. When applicable, the following information shall include a reference to the common tools and equipment; special tools, TMDE, and support equipment; and the repair parts as shown below.

NOTE

The information in 5.3.1.9.24.1 through 5.3.1.9.24.3 applies only to unit (-20), Aviation Unit Maintenance (AVUM), direct support (-30), Aviation Intermediate Maintenance (AVIM), general support (-40), and depot (overhaul) maintenance, and any combination of those maintenance levels (i.e., -23, -34, etc.).

5.3.1.9.24.1 Common tools and equipment. The following statement shall be included:

"COMMON TOOLS AND EQUIPMENT

For authorized common tools and equipment, refer to the Modified Table of Organization and Equipment (MTOE), CTA 50-970, Expendable/Durable Items (Except: Medical, Class V, Repair Parts, and Heraldic Items), or CTA 8-100, Army Medical Department Expendable/Durable Items, as applicable to your unit."

5.3.1.9.24.2 Special tools, TMDE, and support equipment. A reference to the Repair Parts and Special Tools List (RPSTL) and MAC shall be included. When no special tools or equipment are required, it shall be so stated. If tools are to be fabricated, reference to the Illustrated List of Manufactured Items work package shall be made.

5.3.1.9.24.3 Repair parts. One of the two following statements shall be included:

"Repair parts are listed and illustrated in the repair parts and special tools list (*insert TM number of RPSTL*)."

or

"Repair parts are listed and illustrated in supporting information work package (*insert appropriate work package sequence number*) of this manual."

5.3.1.10 General information work package **(Preventive Maintenance Services Manual only) <pms-ginfowp>**. This work package shall be prepared for Preventive Maintenance Services manuals and shall contain the content requirements provided in 5.3.1.10.1 through 5.3.1.10.2.

5.3.1.10.1 Maintenance activities **<scope>**. The following statement shall be included:

"The Preventive Maintenance Services Inspection Checklist work package contains complete requirements for intermediate (when applicable) and periodic inspection for (insert aircraft model) aircraft. It does not contain instructions for repair, adjustment, or other means of rectifying conditions, nor does it contain instruction for troubleshooting to find causes for malfunctioning. Specific tolerances, limits, etc., can be found in the applicable maintenance manuals. Use of the alphabetical index in the applicable manuals will facilitate locating the required information."

"The inspections prescribed in the Preventive Maintenance Services Inspection Checklist work package will be performed at a specific period by Aviation Unit Maintenance (AVUM) activities with assistance of Aviation Intermediate Maintenance (AVIM) and Depot Maintenance activities when required."

5.3.1.10.2 General information. The following statement shall be included:

"**INSPECTION REQUIREMENTS.**

The inspection requirements contained in the Preventive Maintenance Services Inspection Checklist work package are stated in such a manner as to establish when certain equipment is to be inspected and what conditions are desired/undesired (*insert WP and figure number*). Compliance with the provisions outlined herein is required in order to ensure that latent defects are discovered and corrected before malfunctioning or serious trouble results. Inspection requirements are arranged, as nearly as possible, according to the manner in which they will be performed. The requirements are divided into groups and listed under area headings (*insert WP and figure number*).

INSPECTION INTERVALS

The inspection intervals designated will not be exceeded except in actual operational emergencies as explained herein. It is the commander's responsibility to determine (on an individual aircraft basis) when inspection intervals may be exceeded. For this purpose, operational emergencies are conditions of combat, or conditions of disaster which necessitate flight to evacuate aircraft or personnel. When aircraft are operated beyond the normal inspection due-time because of such emergency situation, a circled red X status symbol and an appropriate statement (to include authority) must be entered in block 16 and 17 of DA Form 2408-13 (Aircraft Status Information Record) until such time as the inspection is complete. Since safety may be jeopardized when inspections are delayed to meet emergency requirements, commanders will assure that the aircraft status symbol reverts to a red "X" and that delayed inspections are accomplished immediately upon termination of the actual emergency. When unusual local conditions of environment, utilization, mission, experience of flight crew and maintenance personnel, periods of inactivity, etc., are encountered, the maintenance officer will, at his discretion, increase the scope and/or frequency of maintenance of inspections as necessary to ensure safe flight.

SPECIFIC NON-INSTALLED EQUIPMENT ON AIRCRAFT

The Preventive Maintenance Services Inspection Checklist work package may contain inspection requirements applicable to specific equipment not installed on your aircraft. Those requirements should be disregarded.

DA FORMS

DA Form 2408-13 will be used to record all deficiencies or shortcomings discovered during the daily inspection. DA Form 2404, Equipment Inspection and Maintenance Worksheet, will be used as a work sheet to record all deficiencies or shortcomings discovered during accomplishment of the intermediate or periodic inspection. Upon completion of the inspection, all uncorrected deficiencies or shortcomings listed on DA Form 2404 will be entered on DA Form 2408-13 prepared for that date or DA Form 2408-14, Uncorrected Fault Record (Aircraft), (For intermediate and periodic inspection.)

SPECIAL INSTRUCTIONS

a. The columns headed I and P are used to indicate the requirements for Intermediate (when applicable) and Periodic inspections respectively. When item is required with a frequency other than that indicated by these column headings, the proper frequency is indicated in the appropriate column. For example, when a given item is required at each 3rd intermediate inspection, "3rd" is entered in the I column, opposite the pertinent item. To use the chart, perform all preventive maintenance service items indicated in the pertinent inspection column. The types of inspections are defined as follows:

   I - Intermediate inspection which is performed at (insert flying hours as specified by the aircraft maintenance schedule) flying hours after completion of the periodic inspection.

   P - Periodic inspection is performed every (insert flying hours as specified by the aircraft maintenance schedule) flying hours.

b. Work time requirements to accomplish each inspection are stated at top of the checklist. The work time requirements for individual items within the checklist are stated in the W/T column opposite the pertinent item.

REPORTING ERRORS AND RECOMMENDING IMPROVEMENTS

You can help improve this manual. If you find any mistakes or if you know of a way to improve the procedures, please let us know. Mail your letter or DA Form 2028 (Recommended Changes to Publications and Blank Forms), located in the back of the applicable aircraft maintenance manual (when using the 2028 from the maintenance manual, ensure the publication number and title refer to this PMS) directly to (*insert address of proponent*). You may also send in your recommended changes via electronic mail or by fax. Our fax number is (*insert DSN and commercial number of proponent*). Our e-mail address is: (*insert address of proponent*). A reply will be furnished to you.

INSPECTION AREAS

Inspection areas are shown in WP (*enter WP number and figure number*).”

5.3.1.11 General information work package <**pm-ginfowp> (Phased Maintenance Checklist Manual Only)**. This general information work package shall include verbatim the text below within the quotation marks except for the information indicated by italicized text. Italicized text shall be deleted, and as applicable, replaced with the appropriate information.

“PHASED SCHEDULE

The phased maintenance inspection checklist contains requirements for inspection of the *(insert aircraft model)* aircraft on a phased schedule having a *(insert flight hour cycle)* hour *(flight hours)* cycle with *(insert phase hours)* hour phases. Each requirement included herein is designated for accomplishment at least once, but not more than *(insert number of phases)* times during the *(insert flight hour cycle)* hour cycle.

EXCEEDING THE PHASED SCHEDULE

The phased maintenance inspection intervals designated are the maximum and shall not be exceeded except in actual operational emergencies as explained herein. It is the Commander's responsibility to determine (on an individual aircraft basis) when inspection intervals may be exceeded. For this purpose, operational emergencies are conditions of combat, or conditions of disaster which necessitate flight to evacuate aircraft or personnel. When aircraft are operated beyond the normal inspection due time because of such emergency situations, a circled red X status symbol and an appropriate statement (to include authority) must be entered in block 16 and 17 of DA Form 2408-13 (Aircraft Inspection and Maintenance Record) until such time as the inspection is complete. When inspections are delayed to meet emergency requirements, Commanders will assure that the aircraft status symbol reverts to a red X and that delayed inspections are accomplished immediately upon termination of the actual emergency. When unusual local conditions (utilization, type of mission, personnel, periods of inactivity, environmental conditions, etc.) dictate, it is the prerogative and responsibility of the Maintenance Officer to increase the scope and/or frequency of maintenance or inspection as necessary to ensure safe operation (TM 1-1500-328-23). ℮

MAINTENANCE ACTIVITIES

The inspections prescribed by this checklist will be accomplished at specified phases by Aviation Unit Maintenance (AVUM) activities with assistance of Aviation Intermediate (AVIM) and Depot Maintenance activities when required.

LIMITATIONS

The checklist does not contain instructions for repair, adjustment or other means of rectifying conditions. Neither does it contain special tolerances, limits or instructions for special troubleshooting to find causes for malfunctions. Such data will be obtained from the latest issue of the aircraft *(insert applicable aircraft technical manuals)* series Maintenance Manuals.

CHANGEOVER TO THE PHASED MAINTENANCE SYSTEM

Changeover shall be accomplished in accordance with instructions provided in TB 55-1500-337-24 entitled, 'Phased Maintenance System for Army Aircraft'. The requirements of this TB must be accomplished prior to implementation of Phase 1 inspection requirements specified in this checklist.

PRE-INSPECTION MAINTENANCE TEST FLIGHT (MTF)

A pre-inspection MTF to duplicate non-hazardous equipment problems, determine unsatisfactory conditions, determine equipment operation problems, etc., is recommended prior to start of aircraft disassembly for phased maintenance inspection. The decision to perform the pre-inspection MTF, however, shall be the responsibility of the unit Maintenance Officer.

SUPERSEDES PAGE 69 OF MIL-STD-40051A

SPECIAL INSPECTIONS, CALENDAR INSPECTIONS AND LUBRICATION REQUIREMENTS

Special inspections, calendar inspections and lubrication requirements contained in *(insert applicable aircraft technical manual)* and those listed on the aircraft's DA Form 2408-18 shall be reviewed and accomplished in accordance with the "inspection due" requirements specified in those documents.

TIME BETWEEN OVERHAUL (TBO) AND RETIREMENT LIFE ITEMS CHECK

Prior to start of the applicable phased maintenance inspection, a check will be made of components and their remaining operating hours prior to removal. The latest issue of the aircraft's *(insert applicable aircraft technical manual)* and DA Form 2408-16 shall be referred to for a complete listing of components and their TBO and retirement life.

USING THE PHASED INSPECTION CHECKLIST

1. A new checklist shall be used each time phased maintenance is due on the aircraft. This checklist is arranged such that it can be separated by area and distributed to the maintenance crew.

    a. Space is provided on each checklist form for entering the following data:

        (1) The number of the maintenance inspection phase being performed.

        (2) Aircraft serial number.

        (3) Date of the inspection.

        (4) Total hours. (Block provided for local use.)

    b. For each inspection item a column is provided for entering the following data:

        (1) Status of the aircraft as the result of the inspection requirement.

        (2) Aircraft fault and/or remarks indicated by the inspection requirement.

        (3) Action taken to correct the fault.

        (4) Initials of person performing the corrective action.

2. The checklist is formatted to eliminate the requirements to use DA Form 2404 as temporary records during phased inspections. This checklist pertains to all *(insert applicable aircraft)* aircraft and may, therefore, contain inspection requirements applicable to specific equipment not installed on individual aircraft. When this situation is encountered, those requirements that are not applicable need not be performed.

3. A Supplemental Checklist Sheet form (DA Form 4676-R) is to be used for local reproduction. Copies of this form will be used to write up faults, remarks and corrective actions when additional space is required. These supplemental sheets will be used instead of DA Form 2404 in the accomplishment of the phase maintenance inspections.

REPRINTED WITHOUT CHANGE

4. Faults and remarks on the DA Form 2408-13 and DA Form 2408-14 may be transcribed to this checklist at the discretion of the unit Maintenance Officer.

PHASE NUMBERS

In the column headed 'Inspect Phase Nos.' and adjacent to the sequence number of each inspection requirement, there will appear the word 'ALL' or a series of numbers. The word 'ALL' indicates that inspection requirement shall be accomplished at each phase (or at every *(insert hours)* hour interval) of the *(insert number of hours)* hour cycle. The numbers represent the phase number at which that inspection requirement is to be accomplished. For example, if the numbers *(insert first number)* and *(insert second number)* are shown, this indicates that inspection requirement is to be accomplished at phases *(insert first number)* and *(insert second number)* only (or at every *(insert appropriate hour)* hour interval). If only one number is indicated, then that inspection requirement is accomplished at that phase (or at every *(insert cycle hours)* hours interval). At the completion of phase *(insert last phase number)* the cycle starts over again with Phase 1.

STATUS SYMBOLS

The status column will be used only to enter the status symbol of a fault discovered when performing an inspection requirement. The status symbols used are the same as those defined in TM 38-750. The status symbol shall be entered by the person(s) performing the inspection and is determined by the type of fault that is found. Do not enter a horizontal dash (-) on the checklist merely to show a particular inspection requirement is due. If an inspection requirement reveals no fault, a status symbol will not be entered. The person clearing or correcting the fault shall place his last name initial over the status symbol. A red X or a circled red X status symbol will not be initialed over until after the corrective action has been approved and signed off by a Technical inspector or designated supervisor.

FAULTS AND/OR REMARKS

Fault entries in the Faults and/or Remarks column shall be brief remarks which describe the conditions resulting from the inspection and which require corrective action. The initials of the person making the entry will be entered immediately after the entry. If no fault was found, this column will be left blank.

ACTION TAKEN

a. Entries in the Action Taken column shall be brief remarks which describe the action taken to correct the fault described in the adjacent Faults and/or Remarks column. When faults are assigned a red X status, the corrective action shall be inspected and signed off by the Technical Inspector or designated supervisor.

b. If no fault was found, an appropriate remark shall be entered in the column to indicate that the inspection was accomplished, i.e., 'Inspected and found OK'. If an inspection item is not applicable to the particular inspection phase number in work or to specific equipment installed on an individual aircraft, a 'N/A' entry is required. The initials of the person making the entry shall be entered in the Initial column.

INITIAL

The person correcting the indicated fault shall enter his initials in the initial column opposite the first line of the Action Taken entry.

FINAL RECORDS CHECK

After all corrective actions have been completed and following completion of the phased inspection, the Technical Inspector or designated supervisor shall verify that all applicable forms and records have been properly updated. All uncorrected faults shall be entered on DA Form 2408-13, prepared for that date or to the DA Form 2408-14. A Final Records Checklist shall be used is to ensure forms and records have been inspected for completeness and accuracy prior to release of the aircraft from the phased maintenance inspection. The inspector verifying the final records check shall enter his initials adjacent to the indicated form or record on the Final Records Checklist. The initials entered shall be registered on the Signature Sheet adjacent to that person's signature.

SIGNATURE SHEET

All personnel performing inspection and/or maintenance tasks shall place their signatures and initials on the signature sheet. The purpose of the signature sheet is to provide a correlation between initials entered on the individual checklist sheets and the actual names of the personnel accomplishing these tasks.

MAINTENANCE OPERATIONAL CHECKS

After the completion of any required corrective actions to any of the components of a functional system of the aircraft, maintenance operational checks (MOC) shall be performed on that system to determine the effectiveness of the maintenance actions performed and to verify the proper operation of that system. These MOC shall be performed in accordance with TM 1-1500-328-23. Copies of supplemental sheets (DA Form 4676-R), may be used to record and sign off the Maintenance Operational Checks performed.

MAINTENANCE TEST FLIGHT

When all required inspections have been accomplished and initialed in accordance with the above procedure, a daily inspection in accordance with the TM specified in the inspection checklist work package will be performed on the aircraft to permit performance of a maintenance test flight (MTF). The MTF shall be performed in accordance with the requirements of (insert applicable aircraft technical manuals) and TM 1-1500-328-23 using the MTF form in the MTF technical manual.

CHECKLIST DISTRIBUTION

The completion of each phased maintenance inspection shall be recorded on DA Form 2408-13 as prescribed by TM 38-750. The signed checklist, together with all continuation sheets, shall be attached to DA Form 2408-13, and filed for the six months period as required by TM 38-750. At the end of the six months period, these records shall be transferred to, and filed with, the aircraft historical records, until that same phase is repeated during the next cycle (e.g., the checklist, added continuation sheets, and DA Form 2408-13 for Phase 1, Cycle 1, shall remain on file in the aircraft historical records until Phase 1, Cycle 2 is completed).

INSPECTION AREAS

WP (*insert WP number and figure number*) reflects the inspection areas of the *(insert applicable aircraft model)* aircraft. Those areas are titled as shown. Figure *(insert number)* shows the location of access doors and panels which require removal at various phased maintenance inspections.

SUPERSEDES PAGE 72 OF MIL-STD-40051A

REPORTING ERRORS AND RECOMMENDING IMPROVEMENTS

You can help improve this manual. If you find any mistake or if you know of a way to improve the procedures, please let us know. Mail your letter or DA Form 2028 (Recommended Changes to Publications and Blank Forms), located in the back of this manual direct to: *(insert address of proponent).* You may also send in your recommended changes via electronic mail or by fax. Our fax number is *(insert DSN and commercial number of proponent).* Our e-mail address is: *(insert address of proponent).* A reply will be furnished to you."

5.3.2 Rear matter **<rear>**. As applicable, material following the last text page shall consist of the following:

a. Glossary **<glossary>**.
b. Alphabetical index **<aindx>**.
c. Foldout pages **<foldsect.>**.
d. Reporting errors and recommending improvements DA Forms 2028 **<da2028>**.
e. Authentication page **<authent>**.
f. Back cover **<back>**.

For RPSTLs, the glossary and alphabetical index is not required.

5.3.2.1 Glossary **<glossary>**. A glossary shall be prepared for TMs only when the terms are uncommon and are not adequately defined in the text or in the Army, DoD, or standard dictionary. The glossary shall include a list of terms **<term>** followed by definitions **<def>**. The terms shall be listed in alphabetical order. If a glossary is required, it shall begin on a separate, right-hand page and immediately precede the alphabetical index, if any. Page numbers for a glossary shall begin with Glossary-1, Glossary-2, etc.

5.3.2.2 Alphabetical index **<aindx>**.

a. An alphabetical index shall be prepared unless specified otherwise by the acquiring activity. The index may be an index of work packages only or it may be a detailed index, as applicable.

b. All applicable work package references for each entry shall be indicated, regardless of the type of index being prepared. Page references may be included in a detailed index.

c. The index shall be located at the end of the TM but shall precede the sample DA Form 2028. Indexes shall begin on a separate, right-hand page. Page numbers for an index shall begin with Index-1, Index-2,etc. (Refer to figure 16.)

5.3.2.3 Foldout pages **<foldsect>**. If foldout pages are approved by the acquiring activity, such pages shall follow the last work package, the glossary, or the alphabetical index, whichever forms the last portion of the manual or volume.

5.3.2.4 Reporting errors and recommending improvements DA Form 2028 **<da2028>**. One filled-out sample copy of DA Form 2028, provided by the acquiring activity, and three blank DA Forms 2028 with the TM number, date, and title shall be included at the back of every unclassified TM (except for oversize TMs, pocket-size TMs, and TMs with less than eight pages). The filled out sample shall include guidelines for completing the form.

5.3.2.5 Authentication page **<authent>**. The authentication page, provided by the acquiring activity, shall be the last printed text page of the TM. (Refer to figure 17.)

5.3.2.6 Back cover <**back**>. The outside back cover shall be blank, except for pocket-size TMs and classified TMs. For pocket-size TMs, the outside back cover shall include the TM number. For classified TMs, security classification markings shall be included on the back cover. When applicable, a metric conversion table, covering applicable units included in the TM, shall be placed on the inside back cover.

5.4 Preparation of introductory matter and planning information for frame-based TMs. Requirements for the preparation of introductory matter and planning information necessary to supplement the technical content chapters and associated work packages in MIL-STD-40051-1A through MIL-STD-40051-6A are provided in 5.4.1 through 5.4.4. Appendix A, Technical Manual Content Selection Matrixes provides detailed assembly and content requirements for all TMs covering operation, maintenance, and parts information, at all maintenance levels through depot.

5.4.1 Introductory matter <**frnt**>. As applicable, the following introductory matter shall be prepared

a. IETM installation data <**howtouse**>.

b. CD content frame <**ietm.content**>.

c. Revision summary frame <**loepwp**>.

d. Identification information <**frntcover**>.

e. List of contents <**contents**>.

f. "How To Use This IETM" information <**howtouse**>.

g. General information work package <**ginfowp**>.

h. General information work package <**pms-ginfowp**> **(Preventive Maintenance Services only)**.

i. General information work package <**pm-ginfowp**> **(Phased Maintenance only)**.

5.4.1.1 IETM installation data <**howtouse**>**.** Information on installing the CD-ROM on the computer and launching the IETM shall be prepared. The installation routine shall have an uninstall option and shall determine if ample space is available for the install. The information shall be printed and shall be part of the packaging of the CD-ROM. The following types of install options shall be available to the user.

a. Minimum install. This will load to the PMA only those files necessary to access the program and data on the CD. This requires that the programs for the IETMs be executable from the CD and be able to read the data from the CD. This is the preferred method.

b. Installation of the required files for the PMA to operate as a workstation on a LAN. In these cases, the program and data would be loaded to a server, and the PMA would access the program and data via a LAN. This type of install may be desirable in a flightline or motorpool environment.

c. Loading the executable program to the hard drive. This will require the data be accessed from the CD. This may be used when multiple CDs for a system use the same reader program and the program is loaded to the hard drive for faster operation.

5.4.1.2 CD content frame **<ietm.contents>**. When more than one IETM is resident on a CD, the first information that shall appear on the EDS is the CD content frame. This frame shall provide the IETM number and title of all technical manuals that are contained on the CD.

5.4.1.3 Revision summary frame **<loepwp>**. When a revision to a IETM is issued, a revision summary frame shall be displayed containing a list of work packages by title that have been revised. For each work package listed, a brief description of the major changes shall be provided. The revised work packages listed on the revision summary frame shall be linked to the work package containing the revised information.

5.4.1.4 Identification information **<frntcover>.** Identification information shall be prepared for each IETM and DMWR. The following data shall be included.

a. Security classification (when required).

b. TM number **<tminfono>**.

c. TM title **<prtitle>**.

d. National stock number (NSN) **<nsn>** for item(s) covered.

e. End Item Code (EIC) **<eic>**, as specified in the Army Master Data File (AMDF).

f. Subtitle when required **<stitle>**.

g. Equipment illustration when required **<graphic>**.

h. Availability statement (**depot only**) **<avail>**.

i. Supersedure notice for revisions only **<super>**.

j. Disclosure notice **<disclos>**.

k. Distribution statement **<dist>**.

l. Export control notice warning **<export>**.

m. Destruction notice **<destr>**.

n. Service nomenclature **<servnomen>**.

o. TM date.

p. Reproduction notice <**reprod**> (**depot only**).

q. Distribution restriction <**dist**> (**depot only**).

Additional detailed requirements for the above content information is described in 5.4.1.4.1 through 5.4.1.4.7.

5.4.1.4.1 TM number for joint service IETMs. If the IETM is jointly used, each Service's number shall be included and only the proponent activity's IETM number shall be placed on each frame of the TM. The numbers shall be prefixed with the word Air Force, Army, Marine Corps, or Navy (NAVSEA or NAVAIR), as applicable. The acquiring activity's (proponent activity's) name **<servbranch>** and manual number **<tmno>** shall be placed first. The IETM number(s) for the other Services shall be in alphabetical sequence following the acquiring activity's name and manual number. For example,

"ARMY	TM 11-1510-204-34
AIR FORCE	TO 21M-LGM30G-12
MARINE CORPS	TM 12345A-15/1
NAVY (NAVAIR)	AI-F18AA-WRM-070
NAVY (NAVSEA)	SE211-FA-MMA-010/SPS-10A"

5.4.1.4.2 Availability statement **(depot only) <avail>**. For DMWRs only, the following availability statement shall be included: "This publication is not available through the AG publications centers. This publication is available through *(insert the name and address of the proponent activity)*."

5.4.1.4.3 Disclosure notice **<disclos>**. Unless specified otherwise by the acquiring activity, the following disclosure notice shall be included on all classified and unclassified TMs, except those with distribution statement A: "This information is furnished upon the condition that it will not be released to another nation without the specific authority of the Department of the Army of the United States, that it will be used for military purposes only, that individual or corporate rights originating in the information, whether patented or not, will be respected, that the recipient will report promptly to the United States, any known or suspected compromise, and that the information will be provided substantially the same degree of security afforded it by the Department of Defense of the United States. Also, regardless of any other markings on the document, it will not be downgraded or declassified without written approval of the originating United States agency."

5.4.1.4.4 Distribution statement **<dist>**. All IETMs shall have a distribution statement for each manual or revision. The appropriate distribution statement shall be provided by the acquiring activity as selected from DOD 5230.24.

5.4.1.4.5 Destruction notice **<destr>**. All IETMs marked with distribution statements "B", "C", "D", "E", "F", or "X" shall be marked with the destruction notice provided by the acquiring activity from DoD 5230.24.

5.4.1.4.6 TM date. IETMs shall be dated. The IETM date shall be the date at which the last material to be included was received (copy freeze date, provided by the acquiring activity). The day, month, and year shall be given in that sequence (for example, 10 JULY 1988).

5.4.1.4.7 For Army communications security (COMSEC) manuals use. Unless specified otherwise by the acquiring activity, unclassified IETMs shall contain the notice FOR OFFICIAL USE ONLY. The notice shall be placed at the bottom center of all IETM frames. Classified COMSEC IETMs shall be appropriately marked at the level of classification.

5.4.1.5 List of contents **<contents>**. A list of contents shall be prepared. The subject matter of the IETM shall be in alphabetical order by system/subsystem, equipment. Official nomenclature from the parts information database shall be used. To facilitate accesses, subsystems, subassemblies, installations, and individual components may be indented and listed in alphabetical order under the main system. Further subdivisions shall be included to list all descriptive, operation, troubleshooting, and maintenance tasks for each of the individual subject matter items included in the IETM.

5.4.1.6 "How To Use This IETM" information **<howtouse>**.

a. Information to familiarize the user with special or unusual features of the IETM shall be prepared. Coverage shall lead the user through the IETM and explain important features of the organization and content. For example, the format is explained; operating, troubleshooting, Preventive Maintenance Checks and Services (PMCS) are explained; and repair, maintenance instructions, and other pertinent information are explained.

b. Any peculiarities in the basic structure of the IETM shall be described. "How To Use This IETM" information shall not repeat instructions given within the work packages.

c. For all IETMs (excluding operators) the "How To Use This IETM" information shall include an explanation on how and where parts information is available in the work packages and how the parts information is accessed.

d. For troubleshooting, an explanation on how troubleshooting data is presented in the IETM shall be included. If applicable, an explanation on how failure symptom indexes and malfunction codes correspond to maintenance operational checks and troubleshooting procedures for individual systems and components.

e. An explanation on how to identify hotspots and how they are used and activated.

f. If a double king sized paged-based paper TM containing the supporting schematic and wiring diagrams has been authorized and developed, a reference to this TM by TM number shall be provided.

g. When a standard form (i.e., DA 2408-13, DA 2404, etc.) must be used in the process of performing a task, instructions shall be provided on how these forms are accessed, used, and filled out.

h. Provide an explanation on how to fill out a DA Form 2028 and emphasize that reference shall be made to a work package by the exact title that is provided in the list of contents.

5.4.1.7 General information work package **<ginfowp>**. This work package shall contain the requirements provided in 5.4.1.7.1 through 5.4.1.7.24, as applicable, for the weapon system/equipment.

5.4.1.7.1 Scope **<scope>**. A brief statement shall be prepared to tell what is covered in the IETM. As applicable, the following information shall also be included.

a. Type of manual.

b. Model number(s) and equipment name(s).

c. Purpose of equipment.

d. Special inclusions in the manual, such as drill procedures or on-vehicle loading plans.

5.4.1.7.2 Reporting errors and recommending improvements statement **<reporting>**. A reporting errors and recommending improvements statement shall be included. The mailing address, e-mail address and fax number of the responsible proponent shall be inserted in the statement.

a. Unclassified/standard IETM. Except for classified IETMs, the following statement shall be included.

"**REPORTING ERRORS AND RECOMMENDING IMPROVEMENTS**

You can help improve this IETM. If you find any mistakes or if you know of a way to improve the procedures, please let us know. Mail your letter or DA Form 2028 (Recommended Changes to Publications and Blank Forms), directly to: (*Insert name and address of proponent*). You may also send in your recommended changes via electronic mail or by fax. Our fax number is (*insert DSN and commercial number of proponent*). Our e-mail address is (*insert address of proponent*). A reply will be furnished to you."

b. Classified IETMs. For classified IETMs, the following statement shall be included:

"**REPORTING ERRORS AND RECOMMENDING IMPROVEMENTS**

You can help improve this IETM. If you find any mistakes or if you know of a way to improve this IETM, write and tell us about it. Address your correspondence to (*insert name and address of proponent*). When dealing with classified information, make sure that your correspondence is properly marked and is handled in accordance with current security regulations."

5.4.1.7.3 Maintenance forms, records, and reports **<mfrr>**. The following statement shall be included.

"MAINTENANCE FORMS, RECORDS, AND REPORTS

Department of the Army forms and procedures used for equipment maintenance will be those prescribed by (as applicable) DA PAM 738-750, Functional Users Manual for the Army Maintenance Management System (TAMMS); DA PAM 738-751, Functional Users Manual for the Army Maintenance Management Systems - Aviation (TAMMS-A); or AR 700-138, Army Logistics Readiness and Sustainability."

In addition, for **conventional and chemical ammunition IETMs**, add the following statement.

"Accidents involving injury to personnel or damage to material will be reported on DA Form 285 (Accident Report) in accordance with AR 385-40. Explosives and ammunition malfunctions will be reported in accordance with AR 75-1."

When applicable, add references to SB 742-1, Ammunition Surveillance Procedures.

5.4.1.7.4 Reporting equipment improvement recommendations **<eir>**. The following statement shall be included.

"REPORTING EQUIPMENT IMPROVEMENT RECOMMENDATIONS (EIR)

If your (insert equipment short item name) needs improvement, let us know. Send us an EIR. You, the user, are the only one who can tell us what you don't like about your equipment. Let us know why you don't like the design or performance. Put it on an SF 368 (Product Quality Deficiency Report). Mail it to the address specified in DA PAM 738-750, Functional Users Manual for the Army Maintenance Management System (TAMMS), or as specified by the acquiring activity. We will send you a reply."

5.4.1.7.5 Hand receipt (HR) information **<handreceipt>**. The following statement may be included in operator's/unit maintenance IETMs.

"HAND RECEIPT (HR) INFORMATION

This IETM contains hand receipts that list end item related equipment (i.e., COEI, BII, and AAL) that must be accounted for.

5.4.1.7.6 Corrosion prevention and control **<cpcdata>**. A statement similar to the following shall be prepared.

"CORROSION PREVENTION AND CONTROL (CPC)

Corrosion Prevention and Control (CPC) of Army materiel is a continuing concern. It is important that any corrosion problems with this item be reported so that the problem can be corrected and improvements can be made to prevent the problem in future items.

While corrosion is typically associated with rusting of metals, it can also include deterioration of other materials, such as rubber and plastic. Unusual cracking, softening, swelling, or breaking of these materials may be a corrosion problem.

If a corrosion problem is identified, it can be reported using SF 368, Product Quality Deficiency Report. Use of key words such as "corrosion," "rust," "deterioration," or "cracking" will ensure that the information is identified as a CPC problem.

The form should be submitted to the address specified in DA PAM 738-750, Functional Users Manual for the Army Maintenance Management System (TAMMS)."

For **aircraft IETMs**, this information shall include a reference to TM 55-1500-343-23 (Organizational and Intermediate Avionic Cleaning and Corrosion Prevention/Control).

5.4.1.7.7 Ozone depleting substances (ODS) <**odsdata**>. The continued use of ODS has been prohibited by Executive Order 12856 of 3 August 1993. The use of ODS in Army IETMs is prohibited. A listing of these substances will be provided by the acquiring activity.

5.4.1.7.8 Destruction of Army materiel to prevent enemy use **<destructmat>**. Reference shall be made to the appropriate TM(s) covering the destruction of Army materiel to prevent enemy use as provided by the proponent activity.

5.4.1.7.9 Preparation for storage or shipment **<pssref>**. Reference shall be made to the preparation for storage or shipment procedures, including packaging and administrative storage, found in the applicable maintenance instructions work package.

REPRINTED WITHOUT CHANGE

5.4.1.7.10 Warranty information **<wrntyref>**. When the IETM covers equipment that is under warranty and a Warranty Technical Bulletin (WTB) is published, the applicable WTB shall be referenced. When a WTB is not published, the following statement shall be included:

"WARRANTY INFORMATION

The (insert name of equipment) is warranted for (insert miles or other timeframe as appropriate). The warranty starts on the date found in block 23 of DA Form 2408-9, Equipment Control Record. Report all defects to your supervisor, who will take appropriate action."

5.4.1.7.11 Nomenclature cross-reference list **<nomenreflist>**. A statement on how to access the nomenclature cross-reference list shall be included. (Refer to 4.9.22).

5.4.1.7.12 List of abbreviations / acronyms **<loa>**. A statement on how to access a list of all abbreviations, acronyms, signs, or symbols used in the IETM shall be included (Refer to 4.9.14). For **aircraft IETMs only**, a statement shall be prepared that abbreviations are in accordance with ASME Y14.38, except when the ℄ abbreviation stands for a marking actually found in the aircraft.

5.4.1.7.13 Quality Assurance (QA) **(DMWR and aviation only) <qainfo>** . When specified by the acquiring activity, reference shall be made to the pertinent QA TM(s) or include the appropriate general QA information. If QA information is not referenced but is included in the IETM, it shall be stated that the text of each quality assurance procedure or step in the IETM is preceded (and highlighted) by the addition of a statement such as “QA check”. For **aircraft maintenance IETMs**, include a reference to FM 1-500.

5.4.1.7.14 Quality of material <**qual.mat.info**>. A statement(s) similar to the following shall be included:

“Material used for replacement , repair, or modification must meet the requirements of this IETM. If quality of material requirements are not stated in this IETM, the material must meet the requirements of the drawings, standards, specifications, or approved engineering change proposals applicable to the subject equipment.”

5.4.1.7.15 Safety, care, and handling **<sftyinfo>**. The following general precautions and safety regulations shall be prepared.

a. For **ammunition IETMs**, information shall be prepared to comply with AR 385-62. References to applicable Army Regulations (ARs) for range safety and danger zones during training and combat shall be included. Explanations and official definitions shall be prepared for such safety-related terms as "misfire," "hangfire," and "cook-off," which describe characteristics associated with the specific item(s) covered by the IETM under preparation. A reference to AR 385-64 and DA PAM 385-64 shall be made for general ℄ ammunition care, handling, and safety.

b. For IETMs covering equipment with radioactive parts or components, information shall be prepared to comply with Nuclear Regulatory Commission provisions, and references to applicable ARs and safety TMs on radioactive materials shall be included. If additional coverage on radioactive materials is needed, but is not included in applicable TMs, instructions shall be prepared as required. In addition, the following information shall be prepared for inclusion throughout the IETM.

   (1) Nuclear warning notices shall be placed at the beginning of any instruction covering procedures that will expose personnel to a nuclear radiation hazard.

SUPERSEDES PAGE 80 OF MIL-STD-40051A

(2) Procedures to be followed prior to maintenance actions, or in the event of breakage of radioactive parts or components, including safety, care, and handling instructions.

(3) Radioactive parts or components shall be shown and identified on a parts location diagram or illustration, and warning notices.

(4) A list of radioactive parts or components (refer to 4.9.16) and the type and quantity of radioactive material involved shall be included as part of equipment data..

(5) Instructions for the disposal of radioactive material, such as the requirement to double bag all broken tritium sources in plastic.

c. Electrostatic Discharge (ESD) control standards for the protection of electrical and electronic parts, assemblies, and equipment shall be prepared. The ESD classes shall be identified. (Refer to MIL-STD-1686 and MIL-HDBK-263 which contains ESD control procedures and material necessary to protect these items.) (For classifications of ESD marking procedures, refer to 4.9.17).

d.. All ESD control procedures will be preceded with the alert **"ESD"**. Once the alert is displayed, applicable procedural steps will not be displayed until a manual acknowledgement of the ESD alert message is provided by the user.

e. For **DMWRs**, when applicable, reference shall be made to the electromagnetic compatibility standards (e.g., MIL-STD-461 and MIL-STD-462) that apply to the equipment covered in the DMWR.

5.4.1.7.16 Nuclear hardness **<hcp>**. If equipment covered in the IETM has nuclear survivability requirements (i.e., overpressure and burst, thermal radiation, electromagnetic pulse, or transient radiation effects on electronics), it shall be so stated. The following statement shall be included:

"NUCLEAR HARDNESS

All hardness critical procedures in this manual will be preceded with the alert **"HCP"** as follows:

1. When an entire task is considered hardness critical, the alert will precede the first step of the task.

2. When only certain processes and steps within the work package are hardness critical, the alert will precede the applicable processes and steps.

3. Once the alert is displayed, applicable procedural steps will not be displayed until a manual acknowledgment of the HCP message is provided by the user.

5.4.1.7.17 Security measures for electronic data **<secref>**. Instructions for handling, loading, purging, overwriting, or unloading classified electronic data under usual or unusual conditions, shall be developed. Instructions shall meet the requirements of current regulations as they pertain to automation security.

5.4.1.7.18 Calibration **<calref>**. Equipment requiring calibration shall be identified, and reference shall be made to the publication containing the applicable calibration procedure.

5.4.1.7.19 Engineering Change Proposals (ECPs) **(DMWR only) <ecp>**. The following statement shall be included:

"ENGINEERING CHANGE PROPOSALS

Engineering Change Proposals (ECPs) will be submitted using DD Form 1693 (Engineering Change Proposal [Short Form]). (Refer to MIL-STD-973, Configuration Management, for instructions.) Completed forms should be mailed directly to (enter the name and address of the responsible command or activity). A reply will be furnished to you."

5.4.1.7.19.1 Modification Work Order (MWO) and Engineering Change Proposals (ECPs) list **(DMWR only)**. MWOs and ECPs shall be identified for all modifications which have been incorporated into the work required by the DMWR. MWOs shall be reported as outlined in DA PAM 738-50. The applicable MWOs and the ECPs shall be listed (title and number). This listing shall be supplied by the major subordinate command (MSC).

5.4.1.7.20 Deviations and exceptions **(DMWR only) <deviation>**. The following statement shall be included:

"DEVIATIONS AND EXCEPTIONS

Requests for deviations or exceptions to this Depot Maintenance Work Requirement (DMWR) will be processed in accordance with ISO 9000 Series standards or equivalent."

5.4.1.7.21 Mobilization requirements **(DMWR only) <mobreq>**. The following statement shall be included:

"MOBILIZATION REQUIREMENTS

All requirements of this DMWR will be exempted or revised in the event of mobilization. Only those procedures necessary to return the (insert equipment name) to a serviceable condition will be performed. The exemptions and revisions are explained in maintenance work package (insert appropriate work package sequence number)."

5.4.1.7.22 Flight safety critical aircraft parts (FSCAP) **<fscapreq>**. The following statement shall be included:

"FLIGHT SAFETY CRITICAL AIRCRAFT PARTS (FSCAP)

A flight safety critical aircraft part is defined as any part, assembly, or installation whose failure, malfunction, or absence could cause loss of aircraft, serious damage to aircraft, death of crewmembers, or serious injury to crewmembers.

A critical characteristic is defined as any feature throughout the life cycle of a FSCAP, such as dimension, tolerance, finish, material or assembly, manufacturing process, inspection process, operation, field maintenance requirement, depot overhaul requirement, or other feature that if nonconforming, missing, or degraded, could cause failure or malfunction of a FSCAP.

Throughout the maintenance tasks, “FLIGHT SAFETY CRITICAL AIRCRAFT PARTS” warning alerts will precede the procedural step that includes a FSCAP, emphasizing that this part or parts require special handling during maintenance. Once the alert is displayed, applicable procedural steps will not be displayed until a manual acknowledgment of the FSCAP message is provided by the user”.

5.4.1.7.23 Cost considerations **(DMWR only)** <**cost**>. The following statement shall be included:

"COST CONSIDERATIONS

This work requirement shall be the basis for establishing the extent of overhaul while taking into consideration cost factors. A determination shall be made on all subassemblies/assemblies to replace worn or damaged components which are available in supply, if acquisition cost is less than the cost to repair and restore to the DMWR standard. The cost to repair/restore any individual item with an established Maintenance Expenditure Limit (MEL) to the DMWR standard shall not exceed the MEL, unless a waiver has been approved in accordance with AMC-R 750-51. This requirement does not apply to items exempted from MEL in accordance with AMC-R 750-51."

5.4.1.7.24 Copyright credit line **<copyrt>**. When a copyright credit line is required, the information shall appear as the last paragraph of the general information work package.

5.4.1.8 General information work package **(Preventive Maintenance Services only) <pms-ginfowp>**. This work package shall be prepared for preventive maintenance services instructions and shall contain the content requirements provided in 5.4.1.8.1 and 5.4.1.8.2.

5.4.1.8.1 Maintenance activities **<scope>**. The following statement shall be included:

"The PREVENTIVE MAINTENANCE SERVICES INSPECTION CHECKLIST contains complete requirements for intermediate (when applicable) and periodic inspection for (insert aircraft model) aircraft. It does not contain instructions for repair, adjustment, or other means of rectifying conditions, nor does it contain instruction for troubleshooting to find causes for malfunctioning. Specific tolerances, limits, etc., can be found in the applicable maintenance manuals. Use of the list of contents or alphabetical index in the applicable manuals will facilitate locating the required information."

"The inspections prescribed will be performed at a specific period by Aviation Unit Maintenance (AVUM) activities with assistance of Aviation Intermediate Maintenance (AVIM) and Depot Maintenance activities when required."

5.4.1.8.2 General information. The following statement shall be included:

"**INSPECTION REQUIREMENTS.**

The inspection requirements contained herein are stated in such a manner as to establish when certain equipment is to be inspected and what conditions are desired/undesired. Compliance with the inspection provisions are required in order to ensure that latent defects are discovered and corrected before malfunctioning or serious trouble results. Inspection requirements are arranged, as nearly as possible, according to the manner in which they will be performed. The requirements are divided into groups and listed under area headings in the checklist.

INSPECTION INTERVALS

The inspection intervals designated in the checklist will not be exceeded except in actual operational emergencies as explained herein. It is the commander's responsibility to determine (on an individual aircraft basis) when inspection intervals may be exceeded. For this purpose, operational emergencies are conditions of combat, or conditions of disaster which necessitate flight to evacuate aircraft or personnel. When aircraft are operated beyond the normal inspection due-time because of such emergency situation, a circled red X status symbol and an appropriate statement (to include authority) must be entered in block 16 and 17 of DA Form 2408-13 (Aircraft Status Information Record) until such time as the inspection is complete. Since safety may be jeopardized when inspections are delayed to meet emergency requirements, commanders will assure that the aircraft status symbol reverts to a red "X" and that delayed inspections are accomplished immediately upon termination of the actual emergency. When unusual local conditions of environment, utilization, mission, experience of flight crew and maintenance personnel, periods of inactivity, etc., are encountered, the maintenance officer will, at his discretion, increase the scope and/or frequency of maintenance of inspections as necessary to ensure safe flight.

SPECIFIC NON-INSTALLED EQUIPMENT ON AIRCRAFT

The checklist may contain inspection requirements applicable to specific equipment not installed on your aircraft. Those requirements should be disregarded.

DA FORMS

DA Form 2408-13 will be used to record all deficiencies or shortcomings discovered during the daily inspection. DA Form 2404, Equipment Inspection and Maintenance Worksheet, will be used as a work sheet to record all deficiencies or shortcomings discovered during accomplishment of the intermediate or periodic inspection. Upon completion of the inspection, all uncorrected deficiencies or shortcomings listed on DA Form 2404 will be entered on DA Form 2408-13 prepared for that date or DA Form 2408-14, Uncorrected Fault Record (Aircraft), (For intermediate and periodic inspection). When these forms are not provided on the IETM, the paper forms shall be used.

SPECIAL INSTRUCTIONS

a. The columns headed I and P are used to indicate the requirements for Intermediate (when applicable) and Periodic inspections respectively. When the item is required with a frequency other than that indicated by these column headings, the proper frequency is indicated in the appropriate column. For example, when a given item is required at each 3rd intermediate inspection, "3rd" is entered in the I column, opposite the pertinent item. To use the chart, perform all preventive maintenance service items indicated in the pertinent inspection column. The types of inspections are defined as follows:

   I - Intermediate inspection which is performed at (insert flying hours as specified by the aircraft maintenance schedule) flying hours after completion of the periodic inspection.

   P - Periodic inspection is performed every (insert flying hours as specified by the aircraft maintenance schedule) flying hours.

b. Work time requirements to accomplish each inspection shall be included on the checklist. The work time requirements for individual items within the checklist are stated in the W/T column opposite the pertinent item.

REPORTING ERRORS AND RECOMMENDING IMPROVEMENTS

You can help improve this IETM. If you find any mistakes or if you know of a way to improve the procedures, please let us know. Mail your letter or DA Form 2028 (Recommended Changes to Publications and Blank Forms), directly to: (*Insert name and address of proponent*). You may also send in your recommended changes via electronic mail or by fax. Our fax number is (*insert DSN and commercial number of proponent*). Our e-mail address is (*insert address of proponent*). A reply will be furnished to you."

INSPECTION AREAS

Inspection areas are shown in the PREVENTIVE MAINTENANCE SERVICES INSPECTION CHECKLIST."

5.4.1.9 General information work package <**pm-ginfowp> (Phased Maintenance Checklist Only)**. This general information work package shall include verbatim the text below within the quotation marks except for the information indicated by italicized text. Italicized text shall be deleted, and as applicable, replaced with the appropriate information.

"PHASED SCHEDULE

This phased maintenance inspection checklist contains requirements for inspection of the *(insert aircraft model)* aircraft on a phased schedule having a *(insert flight hour cycle)* hour *(flight hours)* cycle with *(insert phase hours)* hour phases. Each requirement included herein is designated for accomplishment at least once, but not more than *(insert number of phases)* times during the *(insert flight hour cycle)* hour cycle.

EXCEEDING THE PHASED SCHEDULE

The phased maintenance inspection intervals designated in the checklist are the maximum and shall not be exceeded except in actual operational emergencies as explained herein. It is the Commander's responsibility to determine (on an individual aircraft basis) when inspection intervals may be exceeded. For this purpose, operational emergencies are conditions of combat, or conditions of disaster which necessitate flight to evacuate aircraft or personnel. When aircraft are operated beyond the normal inspection due time because of such emergency situations, a circled red X status symbol and an appropriate statement (to include authority) must be entered in block 16 and 17 of DA Form 2408-13 (Aircraft Inspection and Maintenance Record) until such time as the inspection is complete. When inspections are delayed to meet emergency requirements, Commanders will assure that the aircraft status symbol reverts to a red X and that delayed inspections are accomplished immediately upon termination of the actual emergency. When unusual local conditions (utilization, type of mission, personnel, periods of inactivity, environmental conditions, etc.) dictate, it is the prerogative and responsibility of the Maintenance Officer to increase the scope and/or frequency of maintenance or inspection as necessary to ensure safe operation (TM 1-1500-328-23). Œ

MAINTENANCE ACTIVITIES

The inspections prescribed by the checklist will be accomplished at specified phases by Aviation Unit Maintenance (AVUM) activities with assistance of Aviation Intermediate (AVIM) and Depot Maintenance activities when required.

SUPERSEDES PAGE 85 OF MIL-STD-40051A

LIMITATIONS

The checklist does not contain instructions for repair, adjustment or other means of rectifying conditions. Neither does it contain special tolerances, limits or instructions for special troubleshooting to find causes for malfunctions. Such data will be obtained from the latest issue of the aircraft *(insert applicable aircraft technical manuals)* series Maintenance Manuals.

CHANGEOVER TO THE PHASED MAINTENANCE SYSTEM

Changeover shall be accomplished in accordance with instructions provided in TB 55-1500-337-24 entitled, 'Phased Maintenance System for Army Aircraft'. The requirements of this TB must be accomplished prior to implementation of Phase 1 inspection requirements specified in this checklist.

PRE-INSPECTION MAINTENANCE TEST FLIGHT (MTF)

A pre-inspection MTF to duplicate non-hazardous equipment problems, determine unsatisfactory conditions, determine equipment operation problems, etc., is recommended prior to start of aircraft disassembly for phased maintenance inspection. The decision to perform the pre-inspection MTF, however, shall be the responsibility of the unit Maintenance Officer.

SPECIAL INSPECTIONS, CALENDAR INSPECTIONS AND LUBRICATION REQUIREMENTS

Special inspections, calendar inspections and lubrication requirements contained in *(insert applicable aircraft technical manual)* and those listed on the aircraft's DA Form 2408-18 shall be reviewed and accomplished in accordance with the "inspection due" requirements specified in those documents.

TIME BETWEEN OVERHAUL (TBO) AND RETIREMENT LIFE ITEMS CHECK

Prior to start of the applicable phased maintenance inspection, a check will be made of components and their remaining operating hours prior to removal. The latest issue of the aircraft's *(insert applicable aircraft technical manual)* and DA Form 2408-16 shall be referred to for a complete listing of components and their TBO and retirement life.

USING THE PHASED INSPECTION CHECKLIST

1. A new checklist shall be used each time phased maintenance is due on the aircraft. This checklist is arranged such that it can be separated by area and distributed to the maintenance crew.

    a. Space is provided on each checklist form for entering the following data:

        (1) The number of the maintenance inspection phase being performed.

        (2) Aircraft serial number.

        (3) Date of the inspection.

        (4) Total hours. (Block provided for local use.)

b. For each inspection item the following data shall be entered:

(1) Status of the aircraft as the result of the inspection requirement.

(2) Aircraft fault and/or remarks indicated by the inspection requirement.

(3) Action taken to correct the fault.

(4) Initials of person performing the corrective action.

2. The checklist eliminates the need to use DA Form 2404 as temporary records during phased inspections. The checklist pertains to all *(insert applicable aircraft)* aircraft and may, therefore, contain inspection requirements applicable to specific equipment not installed on individual aircraft. When this situation is encountered, those requirements that are not applicable need not be performed.

3. A Supplemental Checklist Sheet form (DA Form 4676-R) is to be used for local reproduction. This form will be used to write up faults, remarks and corrective actions when additional space is required. These supplemental sheets will be used instead of DA Form 2404 in the accomplishment of the phase maintenance inspections. When this form is not provided on the IETM, the paper form shall be used.

4. Faults and remarks on the DA Form 2408-13 and DA Form 2408-14 may be transcribed to the checklist at the discretion of the unit Maintenance Officer.

PHASE NUMBERS

Under the entry headed 'Inspect Phase Nos.' and adjacent to the sequence number of each inspection requirement, there will appear the word 'ALL' or a series of numbers. The word 'ALL' indicates that inspection requirement shall be accomplished at each phase (or at every *(insert hours)* hour interval) of the *(insert number of hours)* hour cycle. The numbers represent the phase number at which that inspection requirement is to be accomplished. For example, if the numbers *(insert first number)* and *(insert second number)* are shown, this indicates that inspection requirement is to be accomplished at phases *(insert first number)* and *(insert second number)* only (or at every *(insert appropriate hour)* hour interval). If only one number is indicated, then that inspection requirement is accomplished at that phase (or at every *(insert cycle hours)* hours interval). At the completion of phase *(insert last phase number)* the cycle starts over again with Phase 1.

STATUS SYMBOLS

The status entry will be used only to enter the status symbol of a fault discovered when performing an inspection requirement. The status symbols used are the same as those defined in TM 38-750. The status symbol shall be entered by the person(s) performing the inspection and is determined by the type of fault that is found. Do not enter a horizontal dash (-) on the checklist merely to show a particular inspection requirement is due. If an inspection requirement reveals no fault, a status symbol will not be entered. The person clearing or correcting the fault shall place his last name initial over the status symbol. A red X or a circled red X status symbol will not be initialed over until after the corrective action has been approved and signed off by a Technical inspector or designated supervisor.

REPRINTED WITHOUT CHANGE

FAULTS AND/OR REMARKS

Fault entries under “Faults and/or Remarks” shall be brief remarks which describe the conditions resulting from the inspection and which require corrective action. The initials of the person making the entry will be entered immediately after the entry. If no fault was found, no additional fault entry data is required.

ACTION TAKEN

a. Entries under “Action Taken” shall be brief remarks which describe the action taken to correct the fault described under “Faults and/or Remarks”. When faults are assigned a red X status, the corrective action shall be inspected and signed off by the Technical Inspector or designated supervisor.

b. If no fault was found, an appropriate remark shall be entered under “Action Taken” to indicate that the inspection was accomplished, i.e., 'Inspected and found OK'. If an inspection item is not applicable to the particular inspection phase number in work or to specific equipment installed on an individual aircraft, a 'N/A' entry is required. The initials of the person making the entry shall be entered in the Initial column.

INITIAL

The person correcting the indicated fault shall enter his initials in the initial column opposite the first line of the Action Taken entry.

FINAL RECORDS CHECK

After all corrective actions have been completed and following completion of the phased inspection, the Technical Inspector or designated supervisor shall verify that all applicable forms and records have been properly updated. All uncorrected faults shall be entered on DA Form 2408-13, prepared for that date or to the DA Form 2408-14. A Final Records Checklist shall be used to ensure forms and records have been inspected for completeness and accuracy prior to release of the aircraft from the phased maintenance inspection. The inspector verifying the final records check shall enter his initials adjacent to the indicated form or record on the Final Records Checklist. The initials entered shall be registered on the Signature Sheet adjacent to that person's signature. When this form is not provided on the IETM, the paper form shall be used.

SIGNATURE SHEET

All personnel performing inspection and/or maintenance tasks shall place their signatures and initials on the signature sheet. The purpose of the signature sheet is to provide a correlation between initials entered on the individual checklist sheets and the actual names of the personnel accomplishing these tasks. When this signature sheet is not provided on the IETM, the signature sheet shall be used.

MAINTENANCE OPERATIONAL CHECKS

After the completion of any required corrective actions to any of the components of a functional system of the aircraft, maintenance operational checks (MOC) shall be performed on that system to determine the effectiveness of the maintenance actions performed and to verify the proper operation of that system. These MOC shall be performed in accordance with TM 1-1500-328-23. Supplemental sheet forms (DA Form 4676- R), may be used to record and sign off the Maintenance Operational Checks performed. When this form is not provided on the IETM, the paper form shall be used.

SUPERSEDES PAGE 88 OF MIL-STD-40051A

MAINTENANCE TEST FLIGHT

When all required inspections have been accomplished and initialed in accordance with the above procedure, a daily inspection in accordance with the TM specified in the inspection checklist work package will be performed on the aircraft to permit performance of a maintenance test flight (MTF). The MTF shall be performed in accordance with the requirements of (insert applicable aircraft technical manuals) and TM 1-1500-328-23 using the MTF form in the MTF technical manual. ℭ

CHECKLIST DISTRIBUTION

The completion of each phased maintenance inspection shall be recorded on DA Form 2408-13 as prescribed by TM 38-750. The signed checklist, together with all continuation sheets, shall be attached to DA Form 2408-13, and filed for the six months period as required by TM 38-750. At the end of the six months period, these records shall be transferred to, and filed with, the aircraft historical records, until that same phase is repeated during the next cycle (e.g., the checklist, added continuation sheets, and DA Form 2408-13 for Phase 1, Cycle 1, shall remain on file in the aircraft historical records until Phase 1, Cycle 2 is completed). When these forms or an electronic equivalent of these forms are not provided on the IETM, the paper forms shall be used.

INSPECTION AREAS

The PHASED MAINTENANCE CHECKLIST reflects the inspection areas of the *(insert applicable aircraft model)* aircraft. Those areas are titled as shown. The checklist provides the location of access doors and panels which require removal at various phased maintenance inspections.

REPORTING ERRORS AND RECOMMENDING IMPROVEMENTS

You can help improve this IETM. If you find any mistakes or if you know of a way to improve the procedures, please let us know. Mail your letter or DA Form 2028 (Recommended Changes to Publications and Blank Forms), directly to: (*Insert name and address of proponent*). You may also send in your recommended changes via electronic mail or by fax. Our fax number is (*insert DSN and commercial number of proponent*). Our e-mail address is (*insert address of proponent*). A reply will be furnished to you."

5.4.2 Additional introductory information work packages. The following work packages shall be developed to support the technical information developed for the IETM.

a. Abbreviation, acronyms, and uncommon terms WP (Refer to 4.9.14) **<abbrevwp>**.

b. Symbols WP (Refer to 4.9.15) **<symbolwp>**.

5.4.3 Alphabetical index **<aindx>**. An alphabetical index is not required.

5.4.4 Reporting errors and recommending improvements DA Form 2028 **<da2028>**. A blank DA Form 2028, or an electronic equivalent, should be provided in the IETM so the users can notify the proponent if any mistakes are found or any recommended improvements can be made to the IETM. Guidelines shall be included for completing the form. When this form or an electronic equivalent of this form is not provided on the IETM, the paper form shall be used.

SUPERSEDES PAGE 89 OF MIL-STD-40051A

6. **NOTES.**

(This section contains information of a general or explanatory nature that may be helpful, but is not mandatory.)

6.1 Intended use. The MIL-STD-40051A series prescribes requirements applicable to various types of technical manuals, and the revisions for these manuals as prepared by or for the Department of the Army.

6.2 Issue of DODISS. When this document is used in acquisition, the applicable issue of the DODISS must be cited in the solicitation. (See 2.2.1.)

6.3 Tailoring guidance. The acquiring activity should tailor any required options offered herein in accordance with Appendix A, Technical Manual Content Selection Matrixes.

6.4 Subject term (key word) listing. The following terms are to be used to identify the MIL-STD-40051A series documents during retrieval searches,

Additional authorization list (AAL)
Basic issue items (BII)
Basis of issue (BOI)
Continuous Acquisition Life-cycle Support (CALS) raster
Computer graphics metafile (CGM)
Components of end item (COEI)
Depot maintenance work requirement (DMWR)
Expendable and durable items list
Illustrations
Initial Graphics Exchange Specification (IGES)
Introductory information
Maintenance allocation chart (MAC)
Maintenance instructions
Operator instructions
Quality assurance (QA)
Repair parts and special tools lists (RPSTL)
Security classification
Standard Generalized Markup Language (SGML)
Supporting information
Theory of operation
Troubleshooting procedures
Work package (WP)
Work package identification number

6.5 Change from previous issue. Marginal notations are not used in this revision to identify changes with respect to the previous issue due to the extent of the changes.

REPRINTED WITHOUT CHANGE

TM 9-2330-227-14 **0029 00**

DIRECT SUPPORT

SHOP VAN SEMITRAILER

(NSN 2330-00-569-9372)

24-VOLT CONNECTOR RECEPTACLE REPAIR
DISASSEMBLY, REPAIR, REASSEMBLY

INITIAL SETUP:

Tools

Pliers, diagonal cutting
Screwdriver, flat-tip 3/16-inch
Soldering iron, gun type
Stripper, wire, hand

Material/Parts

Alcohol, denatured (item 2, WP 0059 00)
Brush, acid swabbing (item 4, WP 0059 00)

Material/Parts- Continued

Flux, rosin (item 8, WP 0059 00)
Solder, non-acid (item 17, WP 0059 00)

Personnel Required

One

Equipment Condition

24-volt connector receptacle removed (WP 0038 00).

DISASSEMBLY

NOTE

Tag wires to aid in installation (WP 0023 00). If circuit marker bands are missing or not readable, replace (WP 0038 00).

1. Unscrew, and pull back bushing retaining nut (2) from shell (1).
2. Using screwdriver, pry off shell (1) from bushing (3).
3. Using pliers, pull out 12 inserts (4) from bushing (3).

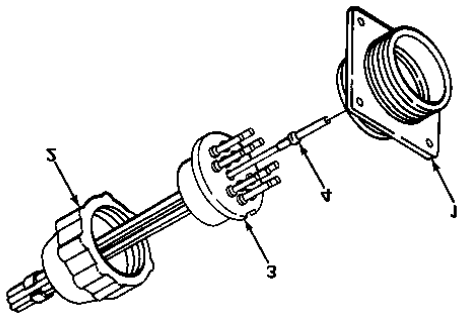

0029 00-1

FIGURE 1. Example of a maintenance work package.

REPAIR

1. Using soldering iron, heat insert (1) and pull from wires (2).
2. Pull out 12 wires (2).
3. Position wires in bushing (3) according to chart (5).
4. Push wires all the way through holes in bushing (3).
5. Using wire stripper, strip insulation back 1/4-inch.
6. Slip an insert (1) over each wire, and solder using non-acid solder and soldering iron.

REASSEMBLY

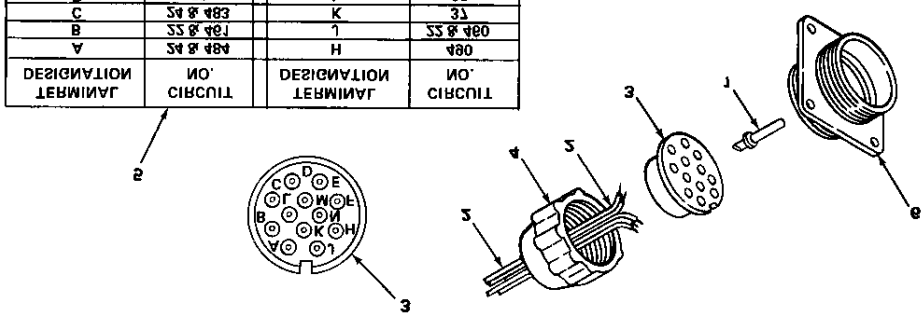

CIRCUIT NO.	TERMINAL DESIGNATION	CIRCUIT NO.	TERMINAL DESIGNATION
08P	H	48P & 4S	A
22	N	10P & 5S	B
23	M	13	C
08	L	08	D
23	K	48P & 1S	E
22	J	23	F

NOTE

Make sure wire ends are clean before soldering. If necessary, clean with cleaning solvent and stiff fiber brush. Solder must be non-acid type; use rosin flux. Wires and soldering iron must be pre-tinned for good connection and maximum transfer of heat. After soldering, clean all solder joints with an acid swabbing brush and alcohol.

1. Push wires (2) and inserts (1) into bushing (3) until inserts (1) are seated.

FIGURE 1. Example of a maintenance work package- Continued.

REASSEMBLY- Continued

2. Put bushing (3) in place within shell (6).
3. Screw on bushing retaining nut (4) to shell (6). Tighten bushing retaining nut (4).
4. Install 24-volt connector receptacle (WP 0030 00).

END OF WORK PACKAGE

FIGURE 1. Example of a maintenance work package- Continued.

SAFETY WARNINGS ICONS

EAR PROTECTION - headphones over ears shows that noise level will harm ears.

ELECTRICAL - electrical wire to arm with electricity symbol running through human body shows that shock hazard is present.

ELECTRICAL - electrical wire to hand with electricity symbol running through hand shows that shock hazard is present.

FALLING PARTS - arrow bouncing off human shoulder and head shows that falling parts present a danger to life or limb.

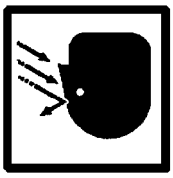

FLYING PARTICLES - arrows bouncing off face shows that particles flying through the air will harm face.

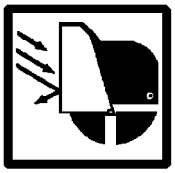

FLYING PARTICLES - arrows bouncing off face with face shield shows that particles flying through the air will harm face.

HEAVY OBJECT - human figure stooping over heavy object shows physical injury potential from improper lifting technique.

FIGURE 2. List of safety warnings icons.

SAFETY WARNINGS ICONS - Continued

HEAVY PARTS - hand with heavy object on top shows that heavy parts can crush and harm.

HEAVY PARTS - foot with heavy object on top shows that heavy parts can crush and harm.

HEAVY PARTS - heavy object on human figure shows that heavy parts present a danger to life or limb.

HEAVY PARTS - heavy object pinning human figure against wall shows that heavy, moving parts present a danger to life or limb.

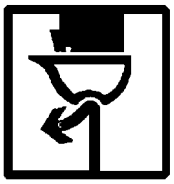

HELMET PROTECTION - arrow bouncing off head with helmet shows that falling parts present a danger.

HOT AREA - hand over object radiating heat shows that part is hot and can burn.

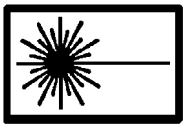

LASER LIGHT - laser light hazard symbol indicates extreme danger for eyes from laser beams and reflections.

FIGURE 2. List of safety warnings icons - Continued..

SAFETY WARNINGS ICONS - Continued

MOVING PARTS - human figure with an arm caught between gears shows that the moving parts of the equipment present a danger to life or limb.

MOVING PARTS - hand with fingers caught between gears shows that the moving parts of the equipment present a danger to life or limb.

MOVING PARTS - hand with fingers caught between rollers shows that the moving parts of the equipment present a danger to life or limb.

SHARP OBJECT - pointed object in hand shows that a sharp object presents a danger to limb.

SHARP OBJECT - pointed object in hand shows that a sharp object presents a danger to limb.

SHARP OBJECT - pointed object in foot shows that a sharp object presents a danger to

SLICK FLOOR - wavy line on floor with legs prone shows that slick floor presents a danger for falling.

FIGURE 2. List of safety warnings icons - Continued..

HAZARDOUS MATERIALS WARNINGS ICONS

BIOLOGICAL - abstract symbol bug shows that a material may contain bacteria or viruses that present a danger to life or health.

CHEMICAL - drops of liquid on hand shows that the material will cause burns or irritation to human skin or tissue.

CRYOGENIC - hand in block of ice shows that the material is extremely cold and can injure human skin or tissue.

EXPLOSION - rapidly expanding symbol shows that the material may explode if subjected to high temperatures, sources of ignition or high pressure.

EYE PROTECTION - person with goggles shows that the material will injure the eyes.

FIRE - flame shows that a material may ignite and cause burns.

FIGURE 3. List of hazardous materials warnings icons.

HAZARDOUS MATERIALS WARNINGS ICONS - Continued

POISON - skull and crossbones shows that a material is poisonous or is a danger to life.

RADIATION - three circular wedges shows that the material emits radioactive energy and can injure human tissue.

VAPOR - human figure in a cloud shows that material vapors present a danger to life or health.

FIGURE 3. List of hazardous materials warnings icons - Continued.

TM 9-2350-314-24

CHAPTER 6

UNIT MAINTENANCE INSTRUCTIONS FOR 155 MM, M109A6 HOWITZER

FIGURE 4. Example of a chapter title page.

CONFIDENTIAL

TM 9-1025-211-100017 00 **0017 00**

OPERATOR MAINTENANCE

M198 HOWITZER

OPERATION UNDER USUAL CONDITIONS

GENERAL

The personnel of the howitzer section consist of the following:

1. A chief of section (CS) whose duties and responsibilities are the following:

   a. Training and efficiency of personnel.

   b. Performance of the section in training; firing, testing, and adjusting fire control equipment; and inspection and maintenance of all section equipment, including the prime mover.

   c. Observance of safety precautions.

   d. Preparation of field fortifications for protection of equipment, ammunition, and personnel.

   e. Camouflage discipline and local security, and radiological, biological, and chemical security discipline.

   f. Maintenance of forms in the equipment record folder.

   g. Policing the section area.

2. A gunner (G) who assists the chief of section in carrying out the duties specified in step 1. above. The gunner's specific duties are described in this manual.

3. An ammunition team chief (ATC) who leads and directs the handling of ammunition and assists the chief
of section in the supervision of the howitzer section. The ATC also performs duties as listed in this manual
and other duties as directed.

4. An assistant gunner (AG) who assists the gunner and, in an emergency, acts as the gunner. The assistant gunner's specific duties are described in this manual.

5. Five cannoneers, numbered 1 to 5, who perform duties as listed in this manual and other duties as directed.

0017 00-1

CONFIDENTIAL
(This page is UNCLASSIFIED)

FIGURE 5. Example of a page with security classification markings.

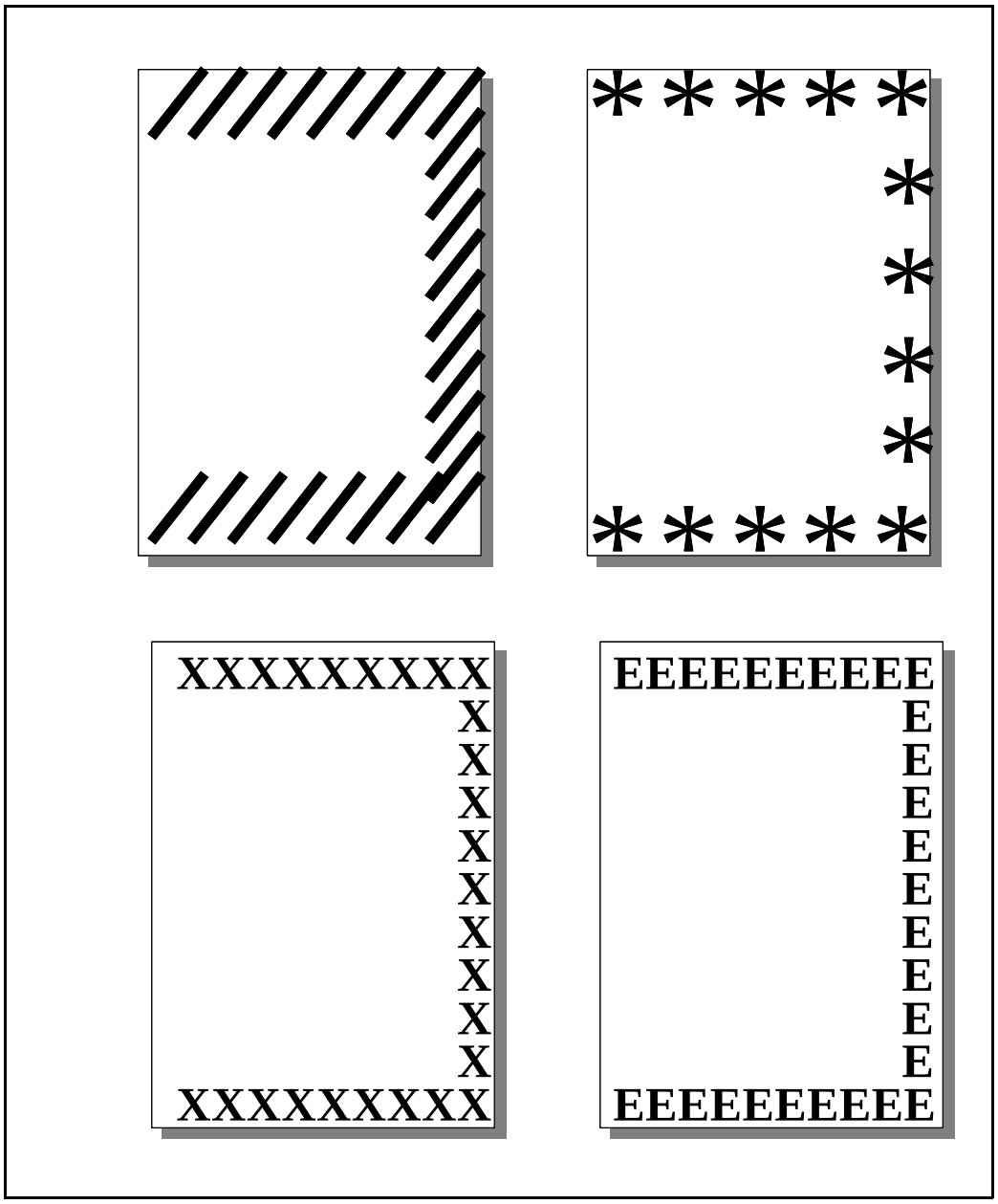

FIGURE 6. Example of emergency page markings. œ

SUPERSEDES PAGE 101 OF MIL-STD-40051A

SECURITY CLASSIFICATION

TM NUMBER

TECHNICAL MANUAL

TYPE OF PUBLICATION
MAINTENANCE LEVELS FOR

NOMENCLATURE OF EQUIPMENT
TYPE, MODEL, PART NUMBER
NATIONAL STOCK NUMBER (EIC)
OR
SUBJECT

SUBTITLE

ILLUSTRATION

AVAILABILITY STATEMENT
SUPERSEDURE NOTICE
DISCLOSURE NOTICE
DISTRIBUTION STATEMENT
WARNING
DESTRUCTION NOTICE

SERVICE NOMENCLATURE

CHANGE DATE **TM DATE**

FIGURE 7. Example of a TM front cover.

REPRINTED WITHOUT CHANGE

TM 3-6665-339-10

TECHNICAL MANUAL

OPERATOR'S MANUAL FOR NUCLEAR-BIOLOGICAL-CHEMICAL RECONNAISSANCE SYSTEM (NBCRS) FOX M93A1

NSN 6665-01-372-1303 (EIC Y60)

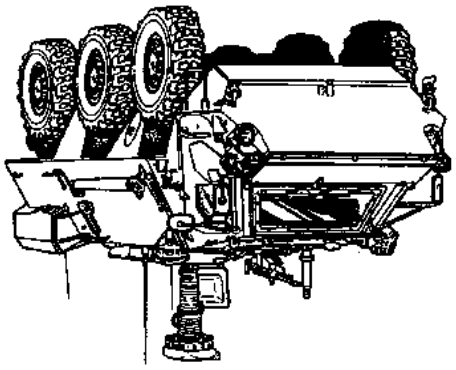

DISTRIBUTION STATEMENT C - Distribution authorized to U.S. Government Agencies and their contractors. This publication is required for administrative and operational purposes, as determined on 22 October 1990. Other requests for this document must be referred to Commander, U.S. Army Chemical Research Development and Engineering Center, ATTN: SMCCR-MAT, Aberdeen Proving Ground, MD 21010-5423.

WARNING - This document contains export-controlled technical data whose export is restricted by the Arms Export Control Act (Title 22, U.S.C., Sec 2751 et seq) or Executive Order 12470. Violation of these export laws is subject to severe criminal penalties.

DESTRUCTION NOTICE - Destroy by any method that will prevent disclosure of contents or reconstruction of the document.

FIGURE 7. Example of a TM front cover- Continued.

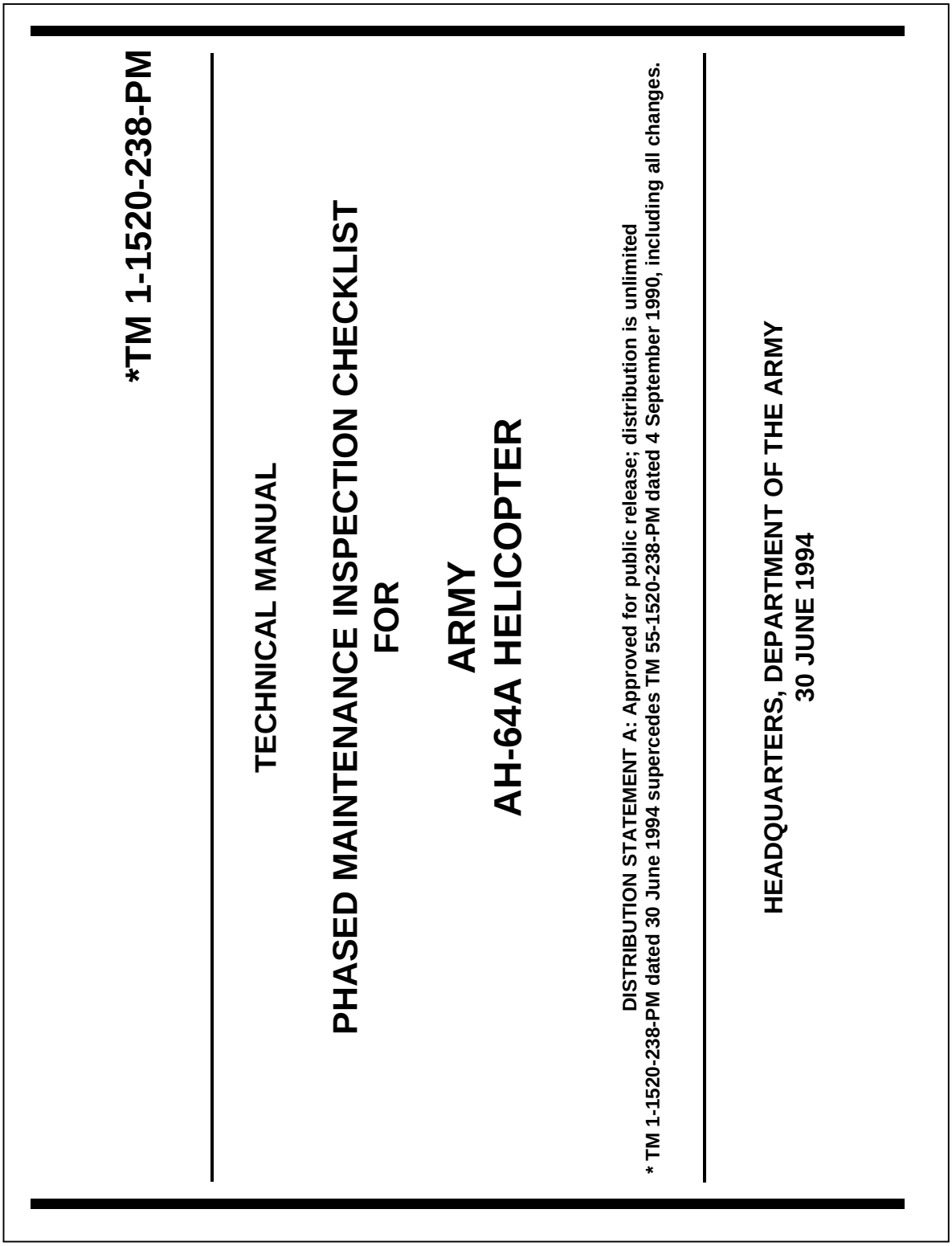

FIGURE 8. Example of a phased maintenance TM front cover

DMWR 11-5895-532-2

DEPOT MAINTENANCE WORK REQUIREMENT

FOR

INTERROGATOR SETS

AN/TPX-46(V)1 (NSN 5895-00-423-1693) (EIC: IZA)
AN/TPX-46(V)2 (NSN 5895-00-423-1694) (EIC: IZB)
AN/TPX-46(V)3 (NSN 5895-00-423-1696) (EIC: IZC)
AN/TPX-46(V)4 (NSN 5895-00-423-1700) (EIC: IZD)
AN/TPX-46(V)6 (NSN 5895-00-423-1702) (EIC: IZE)
AN/TPX-46A(V)1 (NSN 5895-01-162-5237) (EIC: N/A)
AN/TPX-46A(V)2 (NSN 5895-01-162-5239) (EIC: N/A)
AN/TPX-46A(V)3 (NSN 5895-01-163-3646) (EIC: N/A)
AN/TPX-46A(V)4 (NSN 5895-01-162-5240) (EIC: N/A)
AN/TPX-46A(V)6 (NSN 5895-01-163-1235) (EIC: N/A)

This publication is not available through the AG publications centers. This publication is available through US Army Communications-Electronics Command, Fort Monmouth, NJ 07703-5007.

NOTICE: Reproduction for non-military use of the information or illustrations contained in this publication is not permitted without specific approval of the US Army Communications-Electronics Command, Fort Monmouth, NJ 07703-5007.

DISTRIBUTION RESTRICTION: This publication contains technical information that is for official Government use only. Distribution is limited to Government agencies. Requests from outside the US Government for release of this publication under the Freedom of Information Act or the Foreign Military Sales Program must be made to AMSEL-LC-LM-LT, Fort Monmouth, NJ 07703-5007.

US ARMY COMMUNICATIONS-ELECTRONICS COMMAND, FORT MONMOUTH, NJ

FIGURE 9. Example of a DMWR front cover.

*TM 1-1520-238-PM

HEADQUARTERS
DEPARTMENT OF THE ARMY
WASHINGTON, D.C., 30 JUNE 1994

AH-64A HELICOPTER

PHASED MAINTENANCE CHECKLIST

WARNING

CERTAIN INSPECTIONS ARE MANDATORY SAFETY-OF- FLIGHT REQUIREMENTS, AND THE INSPECTION INTERVALS CANNOT BE EXCEEDED. IN THE EVENT THESE INSPECTIONS CANNOT BE ACCOMPLISHED AT THE SPECIFIED INTERVAL, THE AIRCRAFT CONDITION STATUS SYMBOL WILL BE IMMEDIATELY CHANGED TO A RED X. MANDATORY SAFETY-OF- FLIGHT INSPECTION ITEMS ARE PRINTED IN BOLD FACE TYPE.

NOTE

INSPECTION ITEMS CONTAINED IN THIS MANUAL ARE CONSIDERED THE MINIMUM REQUIREMENTS FOR PERFORMING PHASED MAINTENANCE AND MUST BE PERFORMED. THE CUMULATIVE EFFECTS OF INSPECTION DEFERRALS ARE UNKNOWN AND COULD RESULT IN CATASTROPHIC FAILURE OR INCREASED MAINTENANCE AT A LATER DATE. THEREFORE, THE USE OF SPECIAL LETTERING TO EMPHASIZE MANDATORY SAFETY-OF-FLIGHT INSPECTION ITEMS IS NOT TO BE CONSTRUED AS AUTHORITY FOR DEFERRAL OF OTHER INSPECTIONS.

FIGURE 10. Example of a warning data page for phased maintenance inspection and preventive maintenance services.

MANUAL NUMBER

CHANGE NO. 1

HEADQUARTERS, DEPARTMENT OF THE ARMY
WASHINGTON, DC, 31 AUG 1993

TECHNICAL MANUAL

OPERATOR'S, UNIT, AND
DIRECT SUPPORT MAINTENANCE MANUAL
FOR

TEST SET
RADAR AN/TPM-22
NSN 4931-00-707-1229 (EIC D42)

DISTRIBUTION STATEMENT A - Approved for public release; distribution is unlimited.

TM X-XXX-XXXX-XX, 5 June 1987, is updated as follows:

1. File this sheet in front of the manual for reference.
2. This change is a result of new preventive maintenance checks and services procedures and new expendable/durable supplies and materials.
3. New or updated text is indicated by a vertical bar in the outer margin of the page.
4. Added illustrations are indicated by a vertical bar adjacent to the figure number. Changed illustrations are indicated by a miniature pointing hand adjacent to the updated area and a vertical bar adjacent to the figure number.
5. Remove old pages and insert new pages as indicated below.

Remove Pages	Insert Pages
a through d	a through d
None	e through g / (h blank)

6. Replace the following work packages with their revised version.

Work Package Number
WP 0042 00
WP 0154 00

7. Add the following new work packages.

Work Package Number
WP 1625 01
WP 1700 01

FIGURE 11. Example of a change transmittal page.

TM 9-1440-433-24

INSERT LATEST CHANGED PAGES / WORK PACKAGES. DESTROY SUPERSEDED DATA.

LIST OF EFFECTIVE PAGES / WORK PACKAGES

NOTE: The portion of text affected by the changes is indicated by a vertical line in the outer margins of the page. Changes to illustrations are indicated by miniature pointing hands. Changes to wiring diagrams are indicated by shaded areas.

Dates of issue for original and changed pages / work packages are:

Original .. 0 .. 31 Mar 96

Change .. 1 .. 30 Sep 96

TOTAL NUMBER OF PAGES FOR FRONT AND REAR MATTER IS 47 AND TOTAL NUMBER OF WORK PACKAGES IS 380 CONSISTING OF THE FOLLOWING:

Page / WP No.	*Change No.	Page / WP No.	*Change No.	Page / W No.	*Change No.
Title	0				
A - B	1				
a - d	0				
i - iii	0				
iv - vi	1				
vii - x	1				
WP 0001 00 - 0081 00	0				
WP 0082 00	1				
WP 0083 00 - 0085 00	0				
WP 0086 00 - 0098 00	1				
WP 0099 00 - 0371 00	0				
WP 0372 00 - 0378 00	1				
WP 0379 00 - 0380 00	0				
Index-1 - Index-15	0				
Index-16 Blank	0				

* Zero in this column indicates an original page or work package.

FIGURE 12. Example of a list of effective pages/work packages.

TM 3-6665-339-10

HEADQUARTERS,
DEPARTMENT OF THE ARMY
WASHINGTON, D.C., 1 JUNE 1996

TECHNICAL MANUAL

OPERATOR'S MANUAL

NUCLEAR-BIOLOGICAL-CHEMICAL
RECONNAISSANCE SYSTEM (NBCRS)
FOX M93E1
NSN 6665-01-372-1303 (EIC Y60)

REPORTING ERRORS AND RECOMMENDING IMPROVEMENTS

You can help improve this manual. If you find any mistakes or if you know of a way to improve the procedures, please let us know. Mail your letter or DA Form 2028 (Recommended Changes to Publications and Blank Forms), located in the back of this manual, direct to: Technical Director, Edgewood Research Development and Engineering Center, ATTN: SCBRD-ENL-V, Aberdeen Proving Ground, MD 21010-5423. You may also send in your recommended changes via electronic mail or by fax. Our fax number is (*insert DSN and commercial number of proponent).* Our e-mail address is (*insert address of proponent).* A reply will be furnished to you.

DISTRIBUTION STATEMENT C - Distribution authorized to U.S. Government Agencies and their contractors. This publication is required for administrative and operational purposes, as determined on 22 October 1990. Other requests for this document shall be referred to Technical Director, Edgewood Research Development and Engineering Center, ATTN: SCBRD-ENL-V, Aberdeen Proving Ground, MD 21010-5423.

WARNING - This document contains export-controlled technical data whose export is restricted by the Arms Export Control Act (Title 22, U.S.C., Sec 2751 et seq) or Executive Order 12470. Violation of these export laws is subject to severe criminal penalties.

DESTRUCTION NOTICE - Destroy by any method that will prevent disclosure of contents or reconstruction of the document.

FIGURE 13. Example of a title block page, and reporting of errors and recommending improvements statement.

REPRINTED WITHOUT CHANGE

TM 3-665-339-10

TABLE OF CONTENTS

WP Sequence No.

WARNING SUMMARY

HOW TO USE THIS MANUAL

CHAPTER 1 - INTRODUCTORY INFORMATION WITH THEORY OF OPERATION

General Information……..... 0001 00
Equipment Description and Data……..... 0002 00
Introduction……..... 0003 00
Powerpack Theory of Operation……..... 0004 00
Fuel System Theory of Operation……..... 0005 00
Electrical System Theory of Operation……..... 0006 00
Hydraulic System Theory of Operation……..... 0007 00
Amphibious System Theory of Operation……..... 0008 00
Bilge Pumps and Drain Valves Theory of Operation……..... 0009 00
Fire Extinguisher System Theory of Opereation……..... 0010 00

CHAPTER 2. OPERATOR INSTRUCTIONS

Description and Use of Controls and Indicators……..... 0011 00
Operate Intercom……..... 0012 00
Operate NBC Collective Protection System (Operate Microclimatic System And M42 Mask)……..... 0013 00
Operate Domelight……..... 0014 00
Operate Portable Fire Extinguisher.....……..... 0015 00
Enter Driver's Station……..... 0016 00
Adjust Seat, Safety Belt, and Mirror....……..... 0017 00
Power Up Hull Systems..... 0018 00
Install Periscopes....……..... 0019 00
Operate Ballistic Shield……..... 0020 00

i

FIGURE 14. Example of table of contents.

SUPERSEDES PAGE 110 OF MIL-STD-40051A

TM 9-1007-215-24P

TABLE OF CONTENTS

		WP Sequence No.
INTRODUCTION		0001 00
GROUP 00	20-mm self-propelled air defense artillery gun M163A1 repair parts list	0002 00
GROUP 01	20-mm air defense gun cannon M168 repair parts list	0003 00
GROUP 0101	Recoil adapter assembly repair parts list	0004 00
GROUP 0102	Breech bolt assembly repair parts list	0005 00
GROUP 0103	Center clamp assembly repair parts list	0006 00
GROUP 02	20-mm gun mount assembly M157A1 repair parts list	0007 00
GROUP 0201	Storage battery repair parts list	0008 00
GROUP 0202	Ammunition chute repair parts list	0009 00
GROUP 0203	Element chute repair parts list	0010 00
GROUP 0204	Mount component assembly detail illustrations repair parts list	0011 00
GROUP 020401	Turret drum assembly repair parts list	0012 00
GROUP 020402	Azimuth drive assembly repair parts list	0013 00
GROUP 020403	Azimuth drive friction clutch assembly repair parts list	0014 00
GROUP 03	Automatic lead computing sight M61 repair parts list	0015 00
GROUP 0301	Motor and electromagnet assemblies repair parts list	0016 00
GROUP 0302	Combining glass and gimbal repair parts list	0017 00
GROUP 0303	Caging device and cable assembly repair parts list	0018 00
GROUP 0304	Housing support assembly repair parts list	0019 00
GROUP 09	Special tools (repair parts)	0045 00
GROUP 0901	Boresight repair parts list	0046 00
GROUP 0902	Storage drum slot gauge with case repair parts list	0047 00
GROUP 99	Bulk materials list repair parts list	0048 00
SPECIAL TOOLS LIST		0049 00
Special tools for direct support (stowed with case) special tools list		0050 00
National stock number index		0051 00
Part number index		0052 00
Reference designator index		0053 00

FIGURE 15. Example of RPSTL table of contents.

TM X-XXXX-XXX-XX

INDEX

Subject	WP Sequence No.-Page No.
A	
Accessory Section	
Installation	0045 00-6
Removal	0045 00-4
Actuating Pilot Valve Leakage Check	0011 00-10
Actuator, Compressor Bleed Valve	
Assembly	0012 00-5
Cleaning	0012 00-2
Disassembly	0012 00-1
Inspection	0012 00-3
Repair	0012 00-4
Adapter, Compressor Repair	0022 00-9
Afterburner	
Description	0002 00-1
Installation	0048 00-5
Performer Limits	0048 00-3
Removal	0003 00-1
Air System	0004 00-6
Airseal Installation	0010 00-4
Anti-icing Air System Description	0002 00-2
B	
Baffle and Spacer	0034 00-7
Baffle Assembly	0007 00-9
Bearings, Anti-friction	
Balance	0041 00-2
Cleaning	0041 00-1
Bleed Control Limit Curve	0040 00-3
Breather Pressurizing Valve	
Disassembly	0017 00-1
Installation	0017 00-3
C	
Carbon Seals	
Cleaning	0008 00-2
Inspection	0008 00-1
Combustion Chambers	
Igniters	0025 00-7

INDEX- 1

FIGURE 16. Example of an alphabetical index.

By Order of the Secretary of the Army:

Dennis J. Reimer
General, United States Army
Chief of Staff

Official:

JOEL B. HUDSON
Administrative Assistant to the
Secretary of the Army
04964

DISTRIBUTION:

To be distributed in accordance with the initial distribution number (IDN) 369970 requirements for TM 11-5805-798-30-1.

FIGURE 17. Example of an authentication page.

APPENDIX A
TECHNICAL MANUAL CONTENT SELECTION MATRIXES

A.1 SCOPE

A.1.1 Scope. This appendix lists technical content requirements for technical manuals for all major weapon systems and all types of equipment, including test and support equipment. These requirements are applicable for all maintenance levels through overhaul (depot), including DMWRs. Technical requirements are provided for both page-based and frame-based TMs

A.2 APPLICABLE DOCUMENTS.

This section is not applicable to this appendix.

A.3 DEFINITIONS.

This section is not applicable to this appendix.

A.4 GENERAL REQUIREMENTS.

This section is not applicable to this appendix.

A.5 DETAILED REQUIREMENTS.

A.5.1 General. Tailoring of the technical content requirements contained in MIL-STD-40051A through MIL-STD-40051-6A for page-based manuals is provided in A.5.1.1 through A.5.1.1.1. Tailoring instructions for frame-based TMs are provided in A.5.1.2 through A.5.1.2.2.

A.5.1.1 Tailoring requirements for page-based technical manuals. Tables are provided that list all applicable technical content requirements for the development of the following page-based TMs This Appendix is a mandatory part of this standard. The information contained herein is intended for compliance. Copies of the applicable tables will be completed and added as an attachment to the Document Summary List of the contract.

NOTES

1. All TM titles start with the words "TECHNICAL MANUAL" followed by the titles given above.

2. If your RPSTL information contains DEPOT parts/special tools indicate this in the title (e.g., Unit, Direct support, and General Support Maintenance Manual with Repair Parts and Special Tools List including Depot Repair Parts and Special Tools).

3. If your parts information in your IETM contains DEPOT parts/special tools indicate this in the title (e.g., Unit, Direct support, and General Support Maintenance Manual with Parts Information including Depot Repair Parts and Special Tools).

4, If your DMWR IETM contains parts information indicate this in the title (e.g., Depot Maintenance Work Requirement including Parts Information for).

SUPERSEDES PAGE 115 OF MIL-STD-40051A

PUB TYPE	TITLE	APPLICABLE TABLE
-10	Operator's Manual for	A.1
-12	Operator's and Unit Maintenance Manual for	A.1
-12&P	Operator's and Unit Maintenance Manual including Repair Parts and Special Tools List for	A.1
-13	Operator's, Unit, and Direct Support Maintenance Manual for	A.1
-13&P	Operator's, Unit, and Direct Support Maintenance Manual including Repair Parts and Special Tools List for	A.1
-14	Operator's, Unit, Direct Support, and General Support Maintenance Manual for	A.1
-14&P	Operator's, Unit, Direct Support, and General Support Maintenance Manual including Repair Parts and Special Tools List for	A.1
-20	Unit Maintenance Manual for	A.2
-20&P	Unit Maintenance Manual including Repair Parts and Special Tools List for	A.2
-20 (aviation)	Aviation Unit Maintenance Manual for	A.4
-20&P (aviation)	Aviation Unit Maintenance Manual including Repair Parts and Special Tools List for	A.4
-23	Unit and Direct Support Maintenance Manual for	A.3
-23&P	Unit and Direct Support Maintenance Manual including Repair Parts and Special Tools List for	A.3
-23 (Aviation)	Aviation Unit and Intermediate Maintenance Manual for	A.4
-23&P (Aviation)	Aviation Unit and Intermediate Maintenance Manual including Repair Parts and Special Tools List for	A.4
-24	Operator's, Unit, Direct Support, and General Support Maintenance Manual for	A.3
-24&P	Operator's, Unit, Direct Support, and General Support Maintenance Manual including Repair Parts and Special Tools List for	A.3
-30	Direct Support Maintenance Manual for	A.2
-30&P	Direct Support Maintenance Manual including Repair Parts and Special Tools List for	A.2

SUPERSEDES PAGE 116 OF MIL-STD-40051A

PUB TYPE	TITLE	APPLICABLE TABLE
-30 (Aviation)	Aviation Intermediate Maintenance Manual for	A.4
-30&P (Aviation)	Aviation Intermediate Maintenance Manual including Repair Parts and Special Tools List for	A.4
-34	Unit, Direct Support and General Support Maintenance Manual for	A.3
-34&P	Direct Support and General Support Maintenance Manual including Repair Parts and Special Tools List for	A.3
-40	General Support Maintenance Manual for	A.2
-40&P	General Support Maintenance Manual including Repair Parts and Special Tools List for	A.2
DMWR	Depot Maintenance Work Requirement for	A.6
DMWR w/RPSTL	Depot Maintenance Work Requirement including Repair Parts and Special Tools List	A.6
RPSTL	Repair Parts and Special Tools List for	A.5
-T	Aviation Unit Troubleshooting Manual for OR Aviation Intermediate Troubleshooting Manual for OR Aviation Unity and Intermediate Troubleshooting Manual for	A.7
Aircraft PMS	Preventive Maintenance Services Manual for	A.8
Aircraft PM	Phased Maintenance Inspection Checklist for OR Phased Maintenance Checklist for	A.9
IETM (Operator)	Interactive Electronic Technical Manual Operator's Manual for	A.10
IETM (-24&P)	Interactive Electronic Technical Manual Unit, Direct Support, and General Support Maintenance Manual Including Parts Information for	A.11
IETM (AVIM/AVUM) -23&P	Interactive Electronic Technical Manual Aviation Unit and Aviation Intermediate Maintenance Manual Including Parts Information for	A.11
IETM (DMWR)	Interactive Electronic Technical Manual Depot Maintenance Work Requirement for	A.12

SUPERSEDES PAGE 117 OF MIL-STD-40051A

A.5.1.1.1 Technical content tables. Tables A.1 through A.9 simplify tailoring the technical content requirements of technical manuals prepared using this standard as a guide. The tables indicate which parts of MIL-STD-40051 are applicable and list the content requirements for each type of TM. The content requirements for each applicable TM shall be arranged in the order presented in the tables. Inclusion of the applicable tables of this appendix is mandatory and is intended for compliance.

A.5.1.2 Tailoring guidance for frame-based technical manuals. Unless otherwise directed by the acquiring activity, all maintenance instructions (operators through overhaul (depot)) for major weapon systems and all types of equipment, including test and support equipment, shall be on a single CD-ROM. This includes parts information data base or RPSTL, troubleshooting, PMS and PMI checklists, when applicable. The following types of technical manuals should not be combined with the maintenance instructions on the single CD-ROM.

a. Aircraft Operators Manuals.

b. DMWRs.

c. Certain types of Operator Manuals when directed by the acquiring activity.

A.5.1.2.1 Additional tailoring requirements. Due to the EDS limitations for displaying schematics and wiring diagrams provided in IETMs, the acquiring activity may require that the schematics and wiring diagrams be printed on paper in a double king size (11-inch by 17-inch) as a supplement to the IETM.

A.5.1.2.2 Technical content tables. Tables A.10 through A.12 simplify tailoring the technical content requirements of frame-based technical manuals prepared using this standard. The tables indicate which parts of MIL-STD-40051A are applicable and list the content requirements for each type of TM. Inclusion of the tables of this appendix is mandatory and is intended for compliance.

A.5.2 Intended use. First determine the types of TMs required for each acquisition and then duplicate the table(s) that contain the content requirements for those types of TMs Indicate the types of TMs needed by filling in the blank after “TM Requirements Matrix for” at the top of each matrix. For each type of TM selected, indicate in the open blocks the "TM Content" desired by entering an "R" for "REQUIRED" content, “NR” for content that is "NOT REQUIRED", or "O" for optional content that may be required in the TM later by the Government, but can not be determined at the time of the contract. All blocks for the selected TM types in Tables A.1 through A.12 must be completed with an “R”, “NR”, or an "O" for each TM acquisition. The blocks that already contain an "R" are required and cannot be changed. The blocks containing "NR" are not required for that type of TM and should not be included. The blocks that are shaded are as required. The remarks page can be used to provide the contractor additional instructions.

A.5.3 Acquisition requirements. The properly executed Technical Manual content Selection Matrix table becomes contractually binding when it is made part of the contract, statement of work or any other contractual instrument.

Table A.1 TM Requirements Matrix _____

TM Content	-10	-12 -12&P	-13 -13&P	-14 -14&P	MIL-STD-40051A Reference	Element Name
FRONT MATTER	R	R	R	R	5.3.1	<frnt>
Front cover	R	R	R	R	5.3.1.1	<frntcover>
Warning summary	R	R	R	R	5.3.1.2	<warnsum>
Change transmittal page	R	R	R	R	5.3.1.3	<chgsheet>
List of effective pages / work packages	R	R	R	R	5.3.1.4	<loepwp>
Title block page	R	R	R	R	5.3.1.5	<titleblk>
Table of contents	R	R	R	R	5.3.1.6	<contents>
How to use this manual	R	R	R	R	5.3.1.7	<howtouse>
GENERAL INFORMATION WORK PACKAGE	R	R	R	R	5.3.1.9	<ginfowp>
Scope	R	R	R	R	5.3.1.9.1	<scope>
Maintenance forms, records, and reports	R	R	R	R	5.3.1.9.2	<mfrr>
Reporting equipment improvement recommendations (EIR)	R	R	R	R	5.3.1.9.3	<eir>
Hand receipt (HR) manuals					5.3.1.9.4	<handreceipt>
Corrosion prevention and control (CPC)	R	R	R	R	5.3.1.9.5	<cpcdata>
Ozone depleting substances (ODS)	R	R	R	R	5.3.1.9.6	<odsdata>
Destruction of Army materiel to prevent enemy use	R	R	R	R	5.3.1.9.7	<destructmat>
Preparation for storage or shipment	R	R	R	R	5.3.1.9.8	<pssref>
Warranty information					5.3.1.9.9	<wrntyref>
Nomenclature cross-reference list					5.3.1.9.10	<nomenreflist>
List of abbreviations/acronyms					5.3.1.9.11	<loa>
Quality assurance (QA) (aviation only)					5.3.1.9.12	<qainfo>
Quality of material					5.3.1.9.13	<qual.mat.info>

Table A.1 TM Requirements Matrix _____

TM Content	-10	-12 -12&P	-13 -13&P	-14 -14&P	MIL-STD-40051A Reference	Element Name
Safety, care, and handling	R	R	R	R	5.3.1.9.14	<sftyinfo>
Nuclear hardness					5.3.1.9.15	<hcp>
Security measures for electronic data					5.3.1.9.16	<secref>
Calibration					5.3.1.9.17	<calref>
Copyright credit line					5.3.1.9.23	<copyrt>
Supporting information for repair parts, special tools, tmde, and support equipment	NR				5.3.1.9.24	<supdata>
CHAPTER 1. DESCRIPTION AND THEORY OF OPERATION	R	R	R	R	1- 5.1	<gim>
EQUIPMENT DESCRIPTION AND DATA WORK PACKAGE	R	R	R	R	1- 5.2	<descwp>
Equipment characteristics, capabilities, and features	R	R	R	R	1- 5.2.1	<eqpinfo>
Location and description of major components	R	R	R	R	1- 5.2.2	<locdesc>
Differences between models					1- 5.2.3	<eqpdiff>
Equipment data	R	R	R	R	1- 5.2.4	<eqpdata>
Equipment configuration					1- 5.2.5	<eqpconfig>
THEORY OF OPERATION WORK PACKAGE	R	R	R	R	1- 5.3	<thrywp>
CHAPTER X. OPERATOR INSTRUCTIONS	R	R	R	R	2- 5.1	<opim>
DESCRIPTION AND USE OF OPERATOR CONTROLS AND INDICATORS WORK PACKAGE	R	R	R	R	2- 5.2.3.2	<ctrlindwp>
OPERATION UNDER USUAL CONDITIONS WORK PACKAGE	R	R	R	R	2- 5.2.3.3	<opusualwp>
Siting requirements					2- 5.2.3.2	<site>
Shelter requirements					2- 5.2.3.3	<shelter>
Assembly and preparation for use					2- 5.2.3.4	<prepforuse>

Table A.1 TM Requirements Matrix _____

TM Content	-10	-12 -12&P	-13 -13&P	-14 -14&P	MIL-STD-40051A Reference	Element Name
Initial adjustments, before use and self-test					2- 5.2.3.5	<initial>
Operating procedures	R	R	R	R	2- 5.2.3.6	<oper>
Decals and instruction plates					2- 5.2.3.6.2	<instructplt>
Operating auxiliary equipment					2- 5.2.3.7	<operaux>
Preparation for movement					2- 5.2.3.8	<prepmove>
OPERATION UNDER UNUSUAL CONDITIONS WORK PACKAGE	R	R	R	R	2- 5.2.3.4	<opunuwp>
Unusual environment / weather					2- 5.2.3.4.2	<unusualenv>
Fording and swimming					2- 5.2.3.4.3	<fording>
Interim nuclear, biological, and chemical (NBC) decontamination procedures					2- 5.2.3.4.4	<decon>
Jamming and electronic countermeasures (ECM) procedures					2- 5.2.3.4.5	<ecm>
Emergency procedures					2- 5.2.3.4.6	<emergency>
STOWAGE AND DECAL / DATA PLATE GUIDE WORK PACKAGE					2- 5.2.3.5	<stowagewp>
ON-VEHICLE EQUIPMENT LOADING PLAN WORK PACKAGE					2- 5.2.3.6	<eqploadwp>
CHAPTER X. TROUBLESHOOTING PROCEDURES		R	R	R	3- 5.3	<tim>
TROUBLESHOOTING INDEX WORK PACKAGE					3- 5.3.4.2	<tsindxwp>
OPERATIONAL CHECKOUT AND TROUBLESHOOTING PROCEDURES WORK PACKAGES					3- 5.3.4.6	<opcheckwp> <tswp> <opcheck-tswp>

Table A.1 TM Requirements Matrix _____

TM Content	-10	-12 -12&P	-13 -13&P	-14 -14&P	MIL-STD-40051A Reference	Element Name
CHAPTER X. MAINTENANCE INSTRUCTIONS **NOTE** All maintenance work packages shall include a title block, initial setup, and all maintenance tasks applicable to the equipment.	R	R	R	R	4- 5.3	<mim>
SERVICE UPON RECEIPT WORK PACKAGE	NR	R	R	R	4- 5.3.4.1	<surwp>
Siting	NR				4- 5.3.4.1.1	<siting>
Shelter requirements	NR				4- 5.3.4.1.2	<shltr>
Service upon receipt of materiel	NR				4- 5.3.4.1.3	<surmat>
Installation instructions	NR				4- 5.3.4.1.4	<install>
Preliminary servicing of equipment	NR				4- 5.3.4.1.5	<preserv>
Preliminary checks and adjustment of equipment	NR				4- 5.3.4.1.6	<prechkadj>
Preliminary calibration of equipment	NR				4- 5.3.4.1.7	<precal>
Circuit alignment	NR				4- 5.3.4.1.8	<calign>
Ammunition markings	NR				4- 5.3.4.1.9	<ammo.markings>
Classification of defects	NR				4- 5.3.4.1.10	<ammo.defect>
Ammunition handling	NR				4- 5.3.4.1.11	<ammo.handling>
Procedures to activate ammunition	NR				4- 5.3.4.1.12	<arm>
EQUIPMENT / USER FITTING INSTRUCTIONS WORK PACKAGE (personal use equipment)	NR				4- 5.3.4.2	<perseqpwp>
PMCS INTRODUCTION WORK PACKAGE	R	R	R	R	4- 5.3.4.3.1	<pmcsintrowp>
PMCS, INCLUDING LUBRICATION INSTRUCTIONS, WORK PACKAGE	R	R	R	R	4- 5.3.4.3.2	<pmcswp>

Table A.1 TM Requirements Matrix _____

TM Content	-10	-12 -12&P	-13 -13&P	-14 -14&P	MIL-STD-40051A Reference	Element Name
MAINTENANCE WORK PACKAGES **NOTE** As applicable, the following maintenance tasks shall be presented in the general order listed below:	R	R	R	R	4- 5.3	<maintwp>
Assembly and preparation for use (aviation only)					4- 5.3.4.9.1.2	<prepforuse>
Servicing					4- 5.3.4.9.1.3	<service>
Ground handling					4- 5.3.4.9.1.4	<groundtsk>
Inspection of installed items					4- 5.3.4.9.1.5	<inspinstitm>
Removal					4- 5.3.4.9.1.6	<remove>
Disassembly					4- 5.3.4.9.1.7	<disassem>
Cleaning					4- 5.3.4.9.1.8	<clean>
Inspection - acceptance and rejection criteria					4- 5.3.4.9.1.9	<acptrejinsp>
Nondestructive testing inspection (NDTI)					4- 5.3.4.9.1.10	<ndti>
Repair or replacement					4- 5.3.4.9.1.11	<repair-rplc>
Alignment					4- 5.3.4.9.1.12	<align>
Painting					4- 5.3.4.9.1.13	<paint>
Lubrication					4- 5.3.4.9.1.14	<lube>
Assembly					4- 5.3.4.9.1.15	<assem>
Test and inspection					4- 5.3.4.9.1.16	<test-inspect>
Installation					4- 5.3.4.9.1.17	<install>
Adjustment					4- 5.3.4.9.1.18	<adjust>
Calibration					4- 5.3.4.9.1.19	<calibration>
Radio interference suppression					4- 5.3.4.9.1.20	<ris>
Placing in service					4- 5.3.4.9.1.21	<pis>
Testing					4- 5.3.4.9.1.22	<test-pass>

Table A.1 TM Requirements Matrix _____

TM Content	-10	-12 -12&P	-13 -13&P	-14 -14&P	MIL-STD-40051A Reference	Element Name
Preparation for storage or shipment					4- 5.3.4.9.1.25	<pss>
Classification of defects					4- 5.3.4.9.1.26	<ammo.defect>
Handling ammunition					4- 5.3.4.9.1.27	<ammo.handling>
Ammunition markings					4- 5.3.4.9.1.28	<ammo.marking>
Procedures for ammunition activation					4- 5.3.4.9.1.29	<arm>
GENERAL MAINTENANCE WORK PACKAGE					4-5.3.4.10	<gen.maintwp>
AMMUNITION MAINTENANCE WORK PACKAGE					4- 5.3.4.6	<ammowp>
AUXILIARY EQUIPMENT MAINTENANCE WORK PACKAGE					4- 5.3.4.7	<auxeqpwp>
ILLUSTRATED LIST OF MANUFACTURED ITEMS WORK PACKAGE	NR				4- 5.3.4.14	<manuwp>
TORQUE LIMITS WORK PACKAGE	NR				4- 5.3.4.15	<torquewp>
AMMUNITION MARKING INFORMATION WORK PACKAGE	NR				4- 5.3.4.16	<ammo.markingwp>
FOREIGN AMMUNITION (NATO) WORK PACKAGE	NR				4- 5.3.4.17	<natowp>
WIRING DIAGRAMS WORK PACKAGE	NR				4- 5.3.4.23	<wiringwp>
CHAPTER X. SUPPORTING INFORMATION **NOTE** Applicable supporting information work packages shall be arranged in the order in which they are presented here and numbered accordingly.	R	R	R	R	6- 5.1	<sim>
REFERENCES WORK PACKAGE	R	R	R	R	6- 5.2	<refwp>
INTRODUCTION FOR STANDARD FORMAT MAC WORK PACKAGE	NR	R	R	R	6- 5.3.1	<macintrowp>
MAC WORK PACKAGE	NR	R	R	R	6- 5.3.3	<macwp>

Table A.1 TM Requirements Matrix for _____

TM Content	-10	-12 -12&P	-13 -13&P	-14 -14&P	MIL-STD-40051A Reference	Element Name
RPSTL WORK PACKAGE *(-10 through -14)* *(-12&P through -14&P)*	NR NR	NR R	NR R	NR R	6- 5.4	<rpstlwp>
COMPONENTS OF END ITEM (COEI) AND BASIC ISSUE ITEMS (BII) LISTS WORK PACKAGE	R	R	R	R	6- 5.5	<coeibiiwp>
ADDITIONAL AUTHORIZATION LIST (AAL) WORK PACKAGE					6- 5.6	<aalwp>
EXPENDABLE AND DURABLE ITEMS LIST WORK PACKAGE					6- 5.7	<explistwp>
TOOL IDENTIFICATION LIST WORK PACKAGE	NR				6- 5.8	<toolidwp>
MANDATORY REPLACEMENT PARTS WORK PACKAGE	NR				6- 5.9	<mrplwp>
SUPPORT ITEMS WORK PACKAGE					6- 5.11	<supitemwp>
ADDITIONAL SUPPORTING WORK PACKAGES					6- 5.12	<genwp>
REAR MATTER	R	R	R	R	5.3.2	<rear>
Glossary					5.3.2.1	<glossary>
Alphabetical index					5.3.2.2	<aindx>
Foldout pages					5.3.2.3	<foldsect>
DA Form 2028	R	R	R	R	5.3.2.4	<da2028>
Authentication page	R	R	R	R	5.3.2.5	<authent>
Back cover	R	R	R	R	5.3.2.6	<back>

Legend

R Required
NR Not Required
O Optional
Shaded As Required

Table A.2 TM Requirements Matrix for_____

TM Content	-20 -20&P	-30 -30&P	-40 -40&P	MIL-STD-40051A Reference	Element Name
FRONT MATTER	R	R	R	5.3.1	<frnt>
Front cover	R	R	R	5.3.1.1	<frntcover>
Warning summary				5.3.1.2	<warnsum>
Change transmittal page	R	R	R	5.3.1.3	<chgsheet>
List of effective pages / work packages	R	R	R	5.3.1.4	<loepwp>
Title block page	R	R	R	5.3.1.5	<titleblk>
Table of contents	R	R	R	5.3.1.6	<contents>
How to use this manual	R	R	R	5.3.1.7	<howtouse>
GENERAL INFORMATION WORK PACKAGE	R	R	R	5.3.1.9	<ginfowp>
Scope	R	R	R	5.3.1.9.1	<scope>
Maintenance forms, records, and reports	R	R	R	5.3.1.9.2	<mfrr>
Reporting equipment improvement recommendations (EIR)	R	R	R	5.3.1.9.3	<eir>
Hand receipt (HR) manuals				5.3.1.9.4	<handreceipt>
Corrosion prevention and control (CPC)	R	R	R	5.3.1.9.5	<cpcdata>
Ozone depleting substances (ODS)	R	R	R	5.3.1.9.6	<odsdata>
Destruction of Army materiel to prevent enemy use	R	R	R	5.3.1.9.7	<destructmat>
Preparation for storage or shipment	R	R	R	5.3.1.9.8	<pssref>
Warranty information				5.3.1.9.9	<wrntyref>
Nomenclature cross-reference list				5.3.1.9.10	<nomenreflist>
List of abbreviations	R	R	R	5.3.1.9.11	<loa>
Quality assurance (QA) (aviation only)				5.3.1.9.12	<qainfo>
Quality of material				5.3.1.9.13	<qual.mat.info>
Safety, care, and handling	R	R	R	5.3.1.9.14	<sftyinfo>
Nuclear hardness				5.3.1.9.15	<hcp>
Security measures for electronic data				5.3.1.9.16	<secref>

Table A.2 TM Requirements Matrix for_____

TM Content	-20 -20&P	-30 -30&P	-40 -40&P	MIL-STD-40051A Reference	Element Name
Calibration				5.3.1.9.17	<calref>
Copyright credit line				5.3.1.9.23	<copyrt>
Supporting information for repair parts, special tools, tmde, and support equipment				5.3.1.9.24	<supdata>
CHAPTER 1. DESCRIPTION ANDTHEORY OF OPERATION	R	R	R	1- 5.1	<gim>
EQUIPMENT DESCRIPTION AND DATA WORK PACKAGE	R	R	R	1- 5.2	<descwp>
Equipment characteristics, capabilities, and features	R	R	R	1- 5.2.1	<eqpinfo>
Location and description of major components	R	R	R	1- 5.2.2	<locdesc>
Differences between models				1- 5.2.3	<eqpdiff>
Equipment data	R	R	R	1- 5.2.4	<eqpdata>
Equipment configuration				1- 5.2.5	<eqpconfig>
THEORY OF OPERATION WORK PACKAGE	R	R	R	1- 5.3	<thrywp>
CHAPTER X. TROUBLESHOOTING PROCEDURES	R	R	R	3- 5.3	<tim>
TROUBLESHOOTING INDEX WORK PACKAGE				3- 5.3.4.2	<tsindexwp>
OPERATIONAL CHECKOUT AND TROUBLESHOOTING PROCEDURES WORK PACKAGE				3- 5.3.4.6	<opcheckwp> <tswp> <opcheck-tswp>
CHAPTER X. MAINTENANCE INSTRUCTIONS **NOTE** All maintenance work packages shall include a title block, initial setup, and all maintenance tasks applicable to the equipment.	R	R	R	4- 5.3	<mim>
SERVICE UPON RECEIPT WORK PACKAGE	R	NR	NR	4- 5.3.4.1	<surwp>
Siting		NR	NR	4- 5.3.4.1.1	<siting>
Shelter requirements		NR	NR	4- 5.3.4.1.2	<shltr>
Service upon receipt of materiel		NR	NR	4- 5.3.4.1.3	<surmat>
Installation instructions		NR	NR	4- 5.3.4.1.4	<install>

Table A.2 TM Requirements Matrix for_____

TM Content	-20 -20&P	-30 -30&P	-40 -40&P	MIL-STD-40051A Reference	Element Name
Preliminary servicing of equipment		NR	NR	4- 5.3.4.1.5	<preserv>
Preliminary checks and adjustment of equipment		NR	NR	4- 5.3.4.1.6	<prechkadj>
Preliminary calibration of equipment		NR	NR	4- 5.3.4.1.7	<precal>
Circuit alignment		NR	NR	4- 5.3.4.1.8	<calign>
Ammunition markings		NR	NR	4- 5.3.4.1.9	<ammo.markings>
Classification of defects		NR	NR	4- 5.3.4.1.10	<ammo.defect>
Ammunition handling		NR	NR	4- 5.3.4.1.11	<ammo.handling>
Procedures to activate ammunition		NR	NR	4- 5.3.4.1.12	<arm>
EQUIPMENT / USER FITTING INSTRUCTIONS WORK PACKAGE (personal use equipment)				4- 5.3.4.2	<perseqpwp>
PMCS INTRODUCTION WORK PACKAGE	R	R	R	4- 5.3.4.3.1	<pmcsintro>
PMCS, INCLUDING LUBRICATION INSTRUCTIONS, WORK PACKAGE	R	R	R	4- 5.3.4.3.2	<pmcswp>
MAINTENANCE WORK PACKAGES **NOTE** As applicable, the following maintenance tasks shall be presented in the general order listed below:	R	R	R	4- 5.3	<maintwp>
Assembly and preparation for use (aviation only)				4- 5.3.4.9.1.2	<prepforuse>
Servicing				4- 5.3.4.9.1.3	<service>
Ground handling				4- 5.3.4.9.1.4	<groundtsk>
Inspection of installed items				4- 5.3.4.9.1.5	<inspinstitm>
Removal				4- 5.3.4.9.1.6	<remove>
Disassembly				4- 5.3.4.9.1.7	<disassem>
Cleaning				4- 5.3.4.9.1.8	<clean>
Inspection - acceptance and rejection criteria				4- 5.3.4.9.1.9	<acptrejinsp>
Nondestructive testing inspection (NDTI)				4- 5.3.4.9.1.10	<ndti>
Repair or replacement				4- 5.3.4.9.1.11	<repair-rplc>
Alignment				4- 5.3.4.9.1.12	<align>

Table A.2 TM Requirements Matrix for_____

TM Content	-20 -20&P	-30 -30&P	-40 -40&P	MIL-STD-40051A Reference	Element Name
Painting				4- 5.3.4.9.1.13	<paint>
Lubrication				4- 5.3.4.9.1.14	<lube>
Assembly				4- 5.3.4.9.1.15	<assem>
Test and inspection				4- 5.3.4.9.1.16	<test-inspect>
Installation				4- 5.3.4.9.1.17	<install>
Adjustment				4- 5.3.4.9.1.18	<adjust>
Calibration				4- 5.3.4.9.1.19	<calibration>
Radio interference suppression				4- 5.3.4.9.1.20	<ris>
Placing in service				4- 5.3.4.9.1.21	<pis>
Testing				4- 5.3.4.9.1.22	<test-pass>
Preparation for storage or shipment				4- 5.3.4.9.1.25	<pss>
Classification of defects				4- 5.3.4.9.1.26	<ammo.defect>
Handling ammunition				4- 5.3.4.9.1.27	<ammo.handling>
Ammunition markings				4-5.3.4.9.1.28	<ammo.marking>
Procedures for ammunition activation				4- 5.3.4.9.1.29	<arm>
GENERAL MAINTENANCE WORK PACKAGE				4-5.3.4.10	<gen.maintwp>
AMMUNITION MAINTENANCE WORK PACKAGE				4- 5.3.4.6	<ammowp>
AUXILIARY EQUIPMENT MAINTENANCE WORK PACKAGE				4- 5.3.4.7	<auxeqpwp>
ILLUSTRATED LIST OF MANUFACTURED ITEMS WORK PACKAGE				4- 5.3.4.14	<manuwp>
TORQUE LIMITS WORK PACKAGE				4- 5.3.4.15	<torquewp>
AMMUNITION MARKING INFORMATION WORK PACKAGE				4- 5.3.4.16	<ammo.markingwp>
FOREIGN AMMUNITION (NATO) WORK PACKAGE				4- 5.3.4.17	<natowp>
WIRING DIAGRAMS WORK PACKAGE				4- 5.3.4.23	<wiringwp>

Table A.2 TM Requirements Matrix for_____

TM Content	-20 -20&P	-30 -30&P	-40 -40&P	MIL-STD-40051A Reference	Element Name
CHAPTER X. SUPPORTING INFORMATION **NOTE** Applicable supporting information work packages shall be arranged in the order in which they are presented here and numbered accordingly.	R	R	R	6- 5.1	<sim>
REFERENCES WORK PACKAGE	R	R	R	6- 5.2	<refwp>
INTRODUCTION FOR STANDARD FORMAT MAC WORK PACKAGE	R	NR	NR	6- 5.3.1	<macintrowp>
MAC WORK PACKAGE	R	NR	NR	6- 5.3.3	<macwp>
RPSTL WORK PACKAGE *(-10 through -14)* *(-12&P through -14&P)*	NR R	NR R	NR R	6- 5.4	<rpstlwp>
EXPENDABLE AND DURABLE ITEMS WORK PACKAGE				6- 5.7	<explistwp>
TOOL IDENTIFICATION LIST WORK PACKAGE				6- 5.8	<toolidwp>
MANDATORY REPLACEMENT PARTS WORK PACKAGE				6- 5.9	<mrplwp>
SUPPORT ITEMS WORK PACKAGE				6- 5.11	<supitemwp>
ADDITIONAL SUPPORTING WORK PACKAGES				6- 5.12	<genwp>
REAR MATTER	R	R	R	5.3.2	<rear>
Glossary				5.3.2.1	<glossary>
Alphabetical index				5.3.2.2	<aindx>
Foldout pages				5.3.2.3	<foldsect>
DA Form 2028	R	R	R	5.3.2.4	<da2028>
Authentication page	R	R	R	5.3.2.5	<authent>
Back cover	R	R	R	5.3.2.6	<back>

Legend

R	Required
NR	Not Required
O	Optional
Shaded	As Required

Table A.3 TM Requirements Matrix for _____

TM Content	-23 -23&P	-24 -24&P	-34 -34&P	MIL-STD-40051A Reference	Element Name
FRONT MATTER	R	R	R	5.3.1	<frnt>
Front cover	R	R	R	5.3.1.1	<frntcover>
Warning summary	R	R	R	5.3.1.2	<warnsum>
Change transmittal page	R	R	R	5.3.1.3	<chgsheet>
List of effective pages / work packages	R	R	R	5.3.1.4	<loepwp>
Title block page	R	R	R	5.3.1.5	<titleblk>
Table of contents	R	R	R	5.3.1.6	<contents>
How to use this manual	R	R	R	5.3.1.7	<howtouse>
GENERAL INFORMATION WORK PACKAGE	R	R	R	5.3.1.9	<ginfowp>
Scope	R	R	R	5.3.1.9.1	<scope>
Maintenance forms, records, and reports	R	R	R	5.3.1.9.2	<mfrr>
Reporting equipment improvement recommendations (EIR)	R	R	R	5.3.1.9.3	<eir>
Hand receipt (HR) information				5.3.1.9.4	<handreceipt>
Corrosion prevention and control (CPC)	R	R	R	5.3.1.9.5	<cpcdata>
Ozone depleting substances (ODS)				5.3.1.9.6	<odsdata>
Destruction of Army materiel to prevent enemy use	R	R	R	5.3.1.9.7	<destructmat>
Preparation for storage or shipment	R	R	R	5.3.1.9.8	<pssref>
Warranty information				5.3.1.9.9	<wrntyref>
Nomenclature cross-reference list				5.3.1.9.10	<nomenreflist>
List of abbreviations	R	R	R	5.3.1.9.11	<loa>
Quality assurance (QA) (aviation only)				5.3.1.9.12	<qainfo>
Quality of material				5.3.1.9.13	<qual.mat.info>
Safety, care, and handling	R	R	R	5.3.1.9.14	<sftyinfo>
Nuclear hardness				5.3.1.9.15	<hcp>

Table A.3 TM Requirements Matrix for _____

TM Content	-23 -23&P	-24 -24&P	-34 -34&P	MIL-STD-40051A Reference	Element Name
Security measures for electronic data				5.3.1.9.16	<secref>
Calibration				5.3.1.9.17	<calref>
Copyright credit line				5.3.1.9.23	<copyrt>
Supporting information for repair parts, special tools, tmde, and support equipment				5.3.1.9.24	<supdata>
CHAPTER 1. DESCRIPTION AND THEORY OF OPERATION	R	R	R	1- 5.1	<gim>
EQUIPMENT DESCRIPTION AND DATA WORK PACKAGE	R	R	R	1- 5.2	<descwp>
Equipment characteristics, capabilities, and features	R	R	R	1- 5.2.1	<eqpinfo>
Location and description of major components	R	R	R	1- 5.2.2	<locdesc>
Differences between models				1- 5.2.3	<eqpdiff>
Equipment data	R	R	R	1- 5.2.4	<eqpdata>
Equipment configuration				1- 5.2.5	<eqpconfig>
THEORY OF OPERATION WORK PACKAGE	R	R	R	1- 5.3	<thrywp>
CHAPTER X. TROUBLESHOOTING PROCEDURES	R	R	R	3- 5.3	<tim>
TROUBLESHOOTING INDEX WORK PACKAGE				3- 5.3.4.2	<tsindxwp>
OPERATIONAL CHECKOUT AND TROUBLESHOOTING PROCEDURES WORK PACKAGES				3- 5.3.4.6	<opcheckwp> <tswp> <opcheck-tswp>
CHAPTER X. MAINTENANCE INSTRUCTIONS **NOTE** All maintenance work packages shall include a title block, initial setup, and all maintenance tasks applicable to the equipment.	R	R	R	4- 5.3	<mim>
SERVICE UPON RECEIPT WORK PACKAGE	R	R	NR	4- 5.3.4.1	<surwp>

Table A.3 TM Requirements Matrix for _____

TM Content	-23 -23&P	-24 -24&P	-34 -34&P	MIL-STD-40051A Reference	Element Name
Siting			NR	4- 5.3.4.1.1	<siting>
Shelter requirements			NR	4- 5.3.4.1.2	<shltr>
Service upon receipt of materiel			NR	4- 5.3.4.1.3	<surmat>
Installation instructions			NR	4- 5.3.4.1.4	<install>
Preliminary servicing of equipment			NR	4- 5.3.4.1.5	<preserv>
Preliminary checks and adjustment of equipment			NR	4- 5.3.4.1.6	<prechkadj>
Preliminary calibration of equipment			NR	4- 5.3.4.1.7	<precal>
Circuit alignment			NR	4- 5.3.4.1.8	<calign>
Ammunition markings			NR	4- 5.3.4.1.9	<ammo.markings>
Classification of defects			NR	4- 5.3.4.1.10	<ammo.defect>
Ammunition handling			NR	4- 5.3.4.1.11	<ammo.handling>
Procedures to activate ammunition			NR	4- 5.3.4.1.12	<arm>
EQUIPMENT / USER FITTING INSTRUCTIONS WORK PACKAGE (personal use equipment)				4- 5.3.4.2	<perseqpwp>
PMCS INTRODUCTION WORK PACKAGE	R	R	R	4- 5.3.4.3.1	<pmcsintrowp>
PMCS, INCLUDING LUBRICATION INSTRUCTIONS, WORK PACKAGE	R	R	R	4- 5.3.4.3.2	<pmcswp>
MAINTENANCE WORK PACKAGES **NOTE** As applicable, the following maintenance tasks shall be presented in the general order listed below:	R	R	R	4- 5.3	<maintwp>
Assembly and preparation for use (aviation only)				4- 5.3.4.9.1.2	<prepforuse>
Servicing				4- 5.3.4.9.1.3	<service>
Ground handling				4- 5.3.4.9.1.4	<groundtsk>
Inspection of installed items				4- 5.3.4.9.1.5	<inspinstitm>
Removal				4- 5.3.4.9.1.6	<remove>
Disassembly				4- 5.3.4.9.1.7	<disassem>
Cleaning				4- 5.3.4.9.1.8	<clean>

Table A.3 TM Requirements Matrix for _____

TM Content	-23 -23&P	-24 -24&P	-34 -34&P	MIL-STD-40051A Reference	Element Name
Inspection - acceptance and rejection criteria				4- 5.3.4.9.1.9	<acptrejinsp>
Nondestructive testing inspection (NDTI)				4- 5.3.4.9.1.10	<ndti>
Repair or replacement				4- 5.3.4.9.1.11	<repair-rplc>
Alignment				4- 5.3.4.9.1.12	<align>
Painting				4- 5.3.4.9.1.13	<paint>
Lubrication				4- 5.3.4.9.1.14	<lube>
Assembly				4- 5.3.4.9.1.15	<assem>
Test and inspection				4- 5.3.4.9.1.16	<test-inspect>
Installation				4- 5.3.4.9.1.17	<install>
Adjustment				4- 5.3.4.9.1.18	<adjust>
Calibration				4- 5.3.4.9.1.19	<calibration>
Radio interference suppression				4- 5.3.4.9.1.20	<ris>
Placing in service				4- 5.3.4.9.1.21	<pis>
Testing				4- 5.3.4.9.1.22	<test-pass>
Preparation for storage or shipment				4- 5.3.4.9.1.25	<pss>
Classification of defects				4- 5.3.4.9.1.26	<ammo.defect>
Handling ammunition				4- 5.3.4.9.1.27	<ammo.handling>
Ammunition markings				4- 5.3.4.9.1.28	<ammo.marking>
Procedures for ammunition activation				4- 5.3.4.9.1.29	<arm>
GENERAL MAINTENANCE WORK PACKAGE				4- 5.3.4.10	<genmaintwp>
AMMUNITION MAINTENANCE WORK PACKAGE				4- 5.3.4.6	<ammowp>
AUXILIARY EQUIPMENT MAINTENANCE WORK PACKAGE				4- 5.3.4.7	<auxeqpwp>
ILLUSTRATED LIST OF MANUFACTURED ITEMS WORK PACKAGE				4- 5.3.4.14	<manuwp>

Table A.3 TM Requirements Matrix for _____

TM Content	-23 -23&P	-24 -24&P	-34 -34&P	MIL-STD-40051A Reference	Element Name
TORQUE LIMITS WORK PACKAGE				4- 5.3.4.15	<torquewp>
AMMUNITION MARKING INFORMATION WORK PACKAGE				4- 5.3.4.16	<ammo.markingwp>
FOREIGN AMMUNITION (NATO) WORK PACKAGE				4- 5.3.4.17	<natowp>
WIRING DIAGRAMS WORK PACKAGE				4- 5.3.4.23	<wiringwp>
CHAPTER X. SUPPORTING INFORMATION **NOTE** Applicable supporting information work packages shall be arranged in the order in which they are presented here and numbered accordingly.	R	R	R	6 - 5.1	<sim>
REFERENCES WORK PACKAGE	R	R	R	6 - 5.2	<refwp>
INTRODUCTION FOR STANDARD FORMAT MAC WORK PACKAGE	R	R	NR	5.3.1	<macintrowp>
MAC WORK PACKAGE	R	R	NR	6 - 5.3	<macwp>
RPSTL WORK PACKAGE *(-23, -24, -34)* *(-23&P, -24&P, -34&P)*	NR R	NR R	NR R	6- 5.4	<rpstlwp>
EXPENDABLE AND DURABLE ITEMS LIST WORK PACKAGE				6 - 5.7	<explistwp>
TOOL IDENTIFICATION LIST WORK PACKAGE				6 - 5.8	<toolidwp>
MANDATORY REPLACEMENT PARTS WORK PACKAGE				6 - 5.9	<mrplwp>
SUPPORT ITEMS WORK PACKAGE				6- 5.11	<supitemwp>
ADDITIONAL SUPPORTING WORK PACKAGES				6 - 5.12	<genwp>
REAR MATTER	R	R	R	5.3.2	<rear>
Glossary				5.3.2.1	<glossary>
Alphabetical index				5.3.2.2	<aindx>
Foldout pages				5.3.2.3	<foldsect>

Table A.4 TM Requirements Matrix for _____

TM Content	-23 -23&P	-24 -24&P	-34 -34&P	MIL-STD-40051A Reference	Element Name
DA Form 2028	R	R	R	5.3.2.4	<da2028>
Authentication page	R	R	R	5.3.2.5	<authent>
Back cover	R	R	R	5.3.2.6	<back>

Legend

R	Required
NR	Not Required
O	Optional
Shaded	As Required

Table A.4 TM Requirements Matrix for _____

TM Content	AVUM -20 -20&P	AVIM -30 -30&P	AVUM/AVIM -23 -23&P	MIL-STD-40051A Reference	Element Name
FRONT MATTER	R	R	R	5.3.1	<frnt>
Front cover	R	R	R	5.3.1.1	<frntcover>
Warning summary	R	R	R	5.3.1.2	<warnsum>
Change transmittal page				5.3.1.3	<chgsheet>
List of effective pages/work packages				5.3.1.4	<loepwp>
Title block page	R	R	R	5.3.1.5	<titleblk>
Table of contents	R	R	R	5.3.1.6	<contents>
How to use this manual	R	R	R	5.3.1.7	<howtouse>
GENERAL INFORMATION WORK PACKAGE	R	R	R	5.3.1.9	<ginfowp>
Scope	R	R	R	5.3.1.9.1	<scope>
Maintenance forms, records, and reports	R	R	R	5.3.1.9.2	<mfrr>
Reporting equipment improvement recommendations (EIR)	R	R	R	5.3.1.9.3	<eir>
Hand receipt (HR) information				5.3.1.9.4	<handreceipt>
Corrosion prevention and control (CPC)	R	R	R	5.3.1.9.5	<cpcdata>
Ozone depleting substances (ODS)				5.3.1.9.6	<odsdata>
Destruction of Army materiel to prevent enemy use	R	R	R	5.3.1.9.7	<destructmat>
Preparation for storage or shipment	R	R	R	5.3.1.9.8	<pssref>
Warranty information	R	R	R	5.3.1.9.9	<wrntyref>
Nomenclature cross-reference list				5.3.1.9.10	<nomenreflist>
List of abbreviations	R	R	R	5.3.1.9.11	<loa>
Quality assurance (QA) (aviation only)				5.3.1.9.12	<qainfo>
Quality of material				5.3.1.9.13	<qual.mat.info>
Safety, care, and handling	R	R	R	5.3.1.9.14	<sftyinfo>
Nuclear hardness				5.3.1.9.15	<hcp>
Security measures for electronic data				5.3.1.9.16	<secref>
Calibration				5.3.1.9.17	<calref>

Table A.4 TM Requirements Matrix for _____

TM Content	AVUM -20 -20&P	AVIM -30 -30&P	AVUM/AVIM -23 -23&P	MIL-STD-40051A Reference	Element Name
Flight safety critical aircraft parts (FSCAP)					<fscap.req>
Copyright credit line				5.3.1.9.23	<copyrt>
Supporting information for repair parts, special tools, tmde, and support equipment				5.3.1.9.24	<supdata>
CHAPTER 1. DESCRIPTION ANDTHEORY OF OPERATION	R	R	R	1- 5.1	<gim>
EQUIPMENT DESCRIPTION AND DATA WORK PACKAGE	R	R	R	1- 5.2	<descwp>
Equipment characteristics, capabilities, and features	R	R	R	1- 5.2.1	<eqpinfo>
Location and description of major components	R	R	R	1- 5.2.2	<locdesc>
Differences between models				1- 5.2.3	<eqpdiff>
Equipment data	R	R	R	1- 5.2.4	<eqpdata>
Equipment configuration				1- 5.2.5	<eqpconfig>
THEORY OF OPERATION WORK PACKAGE				1- 5.3	<thrywp>
CHAPTER X. TROUBLESHOOTING PROCEDURES	R	R	R	3- 5.3	<tim>
TROUBLESHOOTING INDEX WORK PACKAGE				3- 5.3.4.2	<tsindxwp>
OPERATIONAL CHECKOUT AND TROUBLESHOOTING PROCEDURES WORK PACKAGES				3- 5.3.4.6	<opcheckwp> <tswp> <opcheck-tswp>
CHAPTER X. MAINTENANCE INSTRUCTIONS **NOTE** All maintenance work packages shall include a title block, initial setup, and all maintenance tasks applicable to the equipment.	R	R	R	4- 5.3	<mim>
SERVICE UPON RECEIPT WORK PACKAGE	R	NR	R	4- 5.3.4.1	<surwp>
Siting		NR		4- 5.3.4.1.1	<siting>

Table A.4 TM Requirements Matrix for ————

TM Content	AVUM -20 -20&P	AVIM -30 -30&P	AVUM/AVIM -23 -23&P	MIL-STD-40051A Reference	Element Name
Shelter requirements		NR		4- 5.3.4.1.2	<shltr>
Service upon receipt of materiel		NR		4- 5.3.4.1.3	<surmat>
Installation instructions		NR		4- 5.3.4.1.4	<install>
Preliminary servicing of equipment		NR		4- 5.3.4.1.5	<preserv>
Preliminary checks and adjustment of equipment		NR		4- 5.3.4.1.6	<prechkadj>
Preliminary calibration of equipment		NR		4- 5.3.4.1.7	<precal>
Circuit alignment		NR		4- 5.3.4.1.8	<calign>
Ammunition markings		NR		4- 5.3.4.1.9	<ammo.markings>
Classification of defects		NR		4- 5.3.4.1.10	<ammo.defect>
Ammunition handling		NR		4- 5.3.4.1.11	<ammo.handling>
Procedures to activate ammunition		NR		4- 5.3.4.1.12	<arm>
EQUIPMENT / USER FITTING INSTRUCTIONS WORK PACKAGE (personal use equipment)				4- 5.3.4.2	<perseqpwp>
PMCS INTRODUCTION WORK PACKAGE	R	R	R	4- 5.3.4.3.1	<pmcintrowp>
PMCS, INCLUDING LUBRICATION INSTRUCTIONS, WORK PACKAGE	R	R	R	4- 5.3.4.3	<pmcswp>
MAINTENANCE WORK PACKAGES **NOTE** As applicable, the following maintenance tasks shall be presented in the general order listed below:	R	R	R	4- 5.3	<maintwp>
Assembly and preparation for use (aviation only)				4- 5.3.4.9.1.2	<prepforuse>
Servicing				4- 5.3.4.9.1.3	<service>
Ground handling				4- 5.3.4.9.1.4	<groundtsk>
Inspection of installed items				4- 5.3.4.9.1.5	<inspinstitm>
Removal				4- 5.3.4.9.1.6	<remove>
Disassembly				4- 5.3.4.9.1.7	<disassem>
Cleaning				4- 5.3.4.9.1.8	<clean>

Table A.4 TM Requirements Matrix for _____

TM Content	AVUM -20 -20&P	AVIM -30 -30&P	AVUM/AVIM -23 -23&P	MIL-STD-40051A Reference	Element Name
Inspection - acceptance and rejection criteria				4- 5.3.4.9.1.9	<acptrejinsp>
Nondestructive testing inspection (NDTI)				4- 5.3.4.9.1.10	<ndti>
Repair or replacement				4- 5.3.4.9.1.11	<repair-rplc>
Alignment				4- 5.3.4.9.1.12	<align>
Painting				4- 5.3.4.9.1.13	<paint>
Lubrication				4- 5.3.4.9.1.14	<lube>
Assembly				4- 5.3.4.9.1.15	<assem>
Test and inspection				4- 5.3.4.9.1.16	<test-inspect>
Installation				4- 5.3.4.9.1.17	<install>
Adjustment				4- 5.3.4.9.1.18	<adjust>
Calibration				4- 5.3.4.9.1.19	<calibration>
Radio interference suppression				4- 5.3.4.9.1.20	<ris>
Placing in service				4- 5.3.4.9.1.21	<pis>
Testing				4- 5.3.4.9.1.22	<test-pass>
Preparation for storage or shipment				4- 5.3.4.9.1.25	<pss>
Classification of defects				4- 5.3.4.9.1.26	<ammo.defect>
Handling ammunition				4- 5.3.4.9.1.27	<ammo.handling>
Ammunition markings				4-5.3.4.9.1.28	<ammo.marking>
Procedures for ammunition activation				4- 5.3.4.9.1.29	<arm>
GENERAL MAINTENANCE WORK PACKAGE				4- 5.3.4.10	<gen.maintwp>
AMMUNITION MAINTENANCE WORK PACKAGE				4- 5.3.4.6	<ammowp>
AUXILIARY EQUIPMENT MAINTENANCE WORK PACKAGE				4- 5.3.4.7	<auxeqpwp>
ILLUSTRATED LIST OF MANUFACTURED ITEMS WORK PACKAGE				4- 5.3.4.14	<manuwp>
TORQUE LIMITS WORK PACKAGE				4- 5.3.4.15	<torquewp>

Table A.4 TM Requirements Matrix for _____

TM Content	AVUM -20 -20&P	AVIM -30 -30&P	AVUM/AVIM -23 -23&P	MIL-STD-40051A Reference	Element Name
AMMUNITION MARKING INFORMATION WORKING PACKAGE				4- 5.3.4.16	<ammo.markingwp>
FOREIGN AMMUNITION (NATO) WORK PACKAGE				4- 5.3.4.17	<natowp>
AIRCRAFT INVENTORY MASTER GUIDE WORK PACKAGE WORK PACKAGE	R	R	R	4- 5.3.4.18	<inventorywp>
STORAGE OF AIRCRAFT WORK PACKAGE WORK PACKAGE	R	R	R	4- 5.3.4.19	<storagewp>
WEIGHT AND BALANCE WORK PACKAGE		R		4- 5.3.4.20	<wtloadwp>
WIRING DIAGRAMS WORK PACKAGE				4- 5.3.4.23	<wiringwp>
CHAPTER X. SUPPORTING INFORMATION **NOTE** Applicable supporting information work packages shall be arranged in the order in which they are presented here and numbered accordingly.	R	R	R	6- 5.1	<sim>
REFERENCES WORK PACKAGE	R	R	R	6- 5.2	<refwp>
INTRODUCTION FOR THREE-LEVEL ARMY AVIATION MAC WORK PACKAGE	R	NR	NR	6- 5.3.2	<macintrowp>
MAC WORK PACKAGE	R	NR	NR	6- 5.3.3	<macwp>
RPSTL *(AVUM, AVIM, AVUM/AVIM) (AVUM&P, AVIM&P, AVUM/AVIM&P)*	NR R	NR R	NR R	6-5.4	<rpstlwp>
EXPENDABLE AND DURABLE ITEMS LIST WORK PACKAGE				6 - 5.7	<explistwp>
TOOL IDENTIFICATION LIST WORK PACKAGE	R	R	R	6 - 5.8	<toolidwp>
MANDATORY REPLACEMENT PARTS WORK PACKAGE	R	R	R	6 - 5.9	<mrplwp>
CRITICAL SAFETY ITEMS (CSI) AND FLIGHT SAFETY CRITICAL AIRCRAFT PARTS (FSCAP) WORK PACKAGE	R	R	R	6- 5.10	<csi.fscap.wp>

Table A.4 TM Requirements Matrix for _____

TM Content	AVUM -20 -20&P	AVIM -30 -30&P	AVUM/AVIM -23 -23&P	MIL-STD-40051A Reference	Element Name
SUPPORT ITEMS WORK PACKAGE				6- 5.11	<supitemwp>
ADDITIONAL SUPPORTING WORK PACKAGES				6 - 5.12	<genwp>
REAR MATTER	R	R	R	5.3.2	<rear>
Glossary				5.3.2.1	<glossary>
Alphabetical index				5.3.2.2	<aindx>
Foldout pages				5.3.2.3	<foldsect>
DA Form 2028	R	R	R	5.3.2.4	<da2028>
Authentication page	R	R	R	5.3.2.5	<authent>
Back cover	R	R	R	5.3.2.6	<back>

Legend

R Required
NR Not Required
O Optional
Shaded As Required

Table A.5 TM Requirements Matrix for _____

TM Content	RPSTL	MIL-STD-40051A Reference	Element Name
FRONT MATTER	R	5.3.1	<frnt>
Front cover	R	5.3.1.1	<frntcover>
Change transmittal page	R	5.3.1.3	<chgsheet>
List of effective pages / work packages	R	5.3.1.4	<loepwp>
Title block page	R	5.3.1.5	<titleblk>
Table of contents	R	5.3.1.6	<contents>
CHAPTER X. REPAIR PARTS AND SPECIAL TOOLS LIST FOR (enter equipment name)	R	5 - 5.3.4	<pim>
INTRODUCTION WORK PACKAGE	R	5 - 5.3.5	<introwp>
REPAIR PARTS LIST WORK PACKAGES	R	5 - 5.3.6	<plwp>
SPECIAL TOOLS LIST WORK PACKAGE	R	5 - 5.3.7	<stlwp>
NSN INDEX WORK PACKAGE	R	5 - 5.3.8.1	<nsnindxwp>
P/N INDEX WORK PACKAGE	R	5 - 5.3.8.2	<pnindxwp>
REFERENCE DESIGNATOR INDEX WORK PACKAGE		5 - 5.3.8.3	<refdesindxwp>
REAR MATTER	R	5.3.2	<rear>
DA Form 2028	R	5.3.2.4	<da2028>
Authentication page	R	5.3.2.5	<authent>
Back cover	R	5.3.2.6	<back>

Legend

R	Required
NR	Not Required
O	Optional
Shaded	As Required

Table A.6 TM Requirements Matrix for _____

TM Content	DMWR and DMWR with RPSTL	MIL-STD-40051A Reference	Element Name
FRONT MATTER	R	5.3.1	<frnt>
Front cover	R	5.3.1.1	<frntcover>
Warning summary		5.3.1.2	<warnsum>
Change transmittal page	R	5.3.1.3	<chgsheet>
List of effective pages / work packages	R	5.3.1.4	<loepwp>
Title block page	R	5.3.1.5	<titleblk>
Table of contents	R	5.3.1.6	<contents>
How to use this manual	NR	5.3.1.7	<howtouse>
GENERAL INFORMATION WORK PACKAGE	R	5.3.1.9	<ginfowp>
Scope	R	5.3.1.9.1	<scope>
Maintenance forms, records, and reports	R	5.3.1.9.2	<mfrr>
Reporting equipment improvement recommendations (EIR)	R	5.3.1.9.3	<eir>
Hand receipt (HR) information		5.3.1.9.4	<handreceipt>
Corrosion prevention and control (CPC)		5.3.1.9.5	<cpcdata>
Ozone depleting substances (ODS)		5.3.1.9.6	<odsdata>
Destruction of Army materiel to prevent enemy use		5.3.1.9.7	<destructmat>
Preparation for storage or shipment		5.3.1.9.8	<pssref>
Warranty information		5.3.1.9.9	<wrntyref>
Nomenclature cross-reference list		5.3.1.9.10	<nomenreflist>
List of abbreviations/acronyms		5.3.1.9.11	<loa>
Quality assurance (QA) (aviation only)		5.3.1.9.12	<qainfo>
Quality of material		5.3.1.9.13	<qual.mat.info>
Safety, care, and handling	R	5.3.1.9.14	<sftyinfo>
Nuclear hardness		5.3.1.9.15	<hcp>
Security measures for electronic data		5.3.1.9.16	<secref>
Calibration		5.3.1.9.17	<calref>

Table A.6 TM Requirements Matrix for _____

TM Content	DMWR and DMWR with RPSTL	MIL-STD-40051A Reference	Element Name
Engineering change proposals (ECP)	R	5.3.1.9.18	<ecp>
Deviations and exceptions	R	5.3.1.9.19	<deviation>
Mobilization requirements	R	5.3.1.9.20	<mobreq>
Flight safety critical aircraft parts	R	5.3.1.9.21	<fscapreq>
Cost considerations	R	5.3.1.9.22	<cost>
Copyright credit line		5.3.1.9.23	<copyrt>
Supporting information for repair parts, special tools, tmde, and support equipment	R	5.3.1.9.24	<supdata>
CHAPTER 1. DESCRIPTION AND THEORY OF OPERATION	R	1- 5.1	<gim>
EQUIPMENT DESCRIPTION AND DATA WORK PACKAGE	R	1- 5.2	<descwp>
Equipment characteristics, capabilities, and features	R	1- 5.2.1	<eqpinfo>
Location and description of major components		1- 5.2.2	<locdesc>
Differences between models		1- 5.2.3	<eqpdiff>
Equipment data		1- 5.2.4	<eqpdata>
Equipment configuration		1- 5.2.5	<eqpconfig>
THEORY OF OPERATION WORK PACKAGES		1- 5.3	<thrywp>
CHAPTER X. TROUBLESHOOTING PROCEDURES	R	3- 5.3	<tim>
PRESHOP ANALYSIS WORK PACKAGE	R	3- 5.3.4.3	<pshopanalwp>
COMPONENT CHECKLIST WORK PACKAGE	R	3- 5.3.4.4	<compchklistwp>
OPERATIONAL CHECKOUT AND TROUBLESHOOTING PROCEDURES WORK PACKAGES		3- 5.3.4.6	<opcheckwp> <tswp> <opcheck-tswp>

Table A.6 TM Requirements Matrix for _____

TM Content	DMWR and DMWR with RPSTL	MIL-STD-40051A Reference	Element Name
CHAPTER X. DEPOT MAINTENANCE INSTRUCTIONS **NOTE** All maintenance work packages shall include a title block, initial setup, and all maintenance tasks applicable to the equipment.	R	4- 5.3	<mim>
MAINTENANCE WORK PACKAGES **NOTE** As applicable, the following maintenance tasks shall be presented in the general order listed below:	R	4- 5.3	<maintwp>
Servicing		4- 5.3.4.9.1.3	<service>
Inspection of installed items		4- 5.3.4.9.1.5	<inspinstitm>
Removal		4- 5.3.4.9.1.6	<remove>
Disassembly		4- 5.3.4.9.1.7	<disassem>
Cleaning		4- 5.3.4.9.1.8	<clean>
Inspection - acceptance and rejection criteria		4- 5.3.4.9.1.9	<acptrejinsp>
Nondestructive testing inspection (NDTI)		4- 5.3.4.9.1.10	<ndti>
Repair or replacement		4- 5.3.4.9.1.11	<repair-rplc>
Alignment		4- 5.3.4.9.1.12	<align>
Painting		4- 5.3.4.9.1.13	<paint>
Lubrication		4- 5.3.4.9.1.14	<lube>
Assembly		4- 5.3.4.9.1.15	<assem>
Test and inspection		4- 5.3.4.9.1.16	<test-inspect>
Installation		4- 5.3.4.9.1.17	<install>
Adjustment		4- 5.3.4.9.1.18	<adjust>
Calibration		4- 5.3.4.9.1.19	<calibration>
Radio interference suppression		4- 5.3.4.9.1.20	<ris>
Placing in service		4- 5.3.4.9.1.21	<pis>
Testing		4- 5.3.4.9.1.22	<test-pass>

Table A.6 TM Requirements Matrix for _____

TM Content	DMWR and DMWR with RPSTL	MIL-STD-40051A Reference	Element Name
Preservation, packaging, and marking	R	4- 5.3.4.9.1.23	<ppm>
Preparation for storage or shipment		4- 5.3.4.9.1.25	<pss>
FACILITIES WORK PACKAGE		4- 5.3.4.8	<facilwp>
OVERHAUL INSPECTION PROCEDURES WORK PACKAGE		4- 5.3.4.13	<oipwp>
DEPOT MOBILIZATION REQUIREMENTS WORK PACKAGE	R	4- 5.3.4.21	<mobilwp>
QUALITY ASSURANCE REQUIREMENTS WORK PACKAGE	R	4- 5.3.4.22	<qawp>
CHAPTER X. SUPPORTING INFORMATION NOTE Applicable supporting information work packages shall be arranged in the order in which they are presented here and numbered accordingly.	R	6- 5.1	<sim>
REFERENCES WORK PACKAGE	R	6- 5.2	<refwp>
RPSTL WORK PACKAGE *(Required for DMWR with RPSTL only)*		6- 5.4	<rpstlwp>
EXPENDABLE AND DURABLE ITEMS LIST WORK PACKAGE		6- 5.7	<explistwp>
TOOL IDENTIFICATION LIST WORK PACKAGE	R	6- 5.8	<toolidwp>
MANDATORY RELACEMENT PARTS WORK PACKAGE	R	6- 5.9	<mrplwp>
CRITICAL SAFETY ITEMS (CSI) AND FLIGHT SAFETY CRITICAL AIRCRAFT PARTS (FSCAP) WORK PACKAGE	R	6- 5.10	<csi.fscap.wp>
SUPPORT ITEMS WORK PACKAGE		6- 5.11	<supitemwp>
ADDITIONAL SUPPORTING WORK PACKAGES		6- 5.12	<genwp>
REAR MATTER	R	5.3.2	<rear>
Glossary		5.3.2.1	<glossary>
Alphabetical index		5.3.2.2	<aindx>
Foldout pages		5.3.2.3	<foldsect>

Table A.6 TM Requirements Matrix for _____

TM Content	DMWR and DMWR with RPSTL	MIL-STD-40051A Reference	Element Name
DA Form 2028	R	5.3.2.4	<da2028>
Authentication page	R	5.3.2.5	<authent>
Back cover	R	5.3.2.6	<back>

Legend

R	Required
NR	Not Required
O	Optional
Shaded	As Required

Table A.7 TM Requirements Matrix for _____

TM Content	Aircraft Troubleshooting	MIL-STD-40051A Reference	Element Name
FRONT MATTER	R	5.3.1	<frnt>
Front cover	R	5.3.1.1	<frntcover>
Warning summary		5.3.1.2	<warnsum>
Change transmittal page	R	5.3.1.3	<chgshet>
List of effective pages / work packages	R	5.3.1.4	<loepwp>
Title block page	R	5.3.1.5	<titleblk>
Table of contents	R	5.3.1.6	<contents>
How to use this manual	R	5.3.1.7	<howtouse>
CHAPTER X. TROUBLESHOOTING PROCEDURES	R	3- 5.3	<tim>
INTRODUCTION WORK PACKAGE	R	5.3.1.8	<tsintrowp>
TECHNICAL DESCRIPTION WORK PACKAGE		3- 5.3.4.5	<techdescwp >
Equipment description and data		1- 5.2	<descproc>
Controls and indicators		2- 5.2.3.2	<ctrlindproc>
Theory of operation		1- 5.3	<thryproc>
TROUBLESHOOTING INDEX WORK PACKAGE		3-5.3.4.2	<tsindxwp>
OPERATIONAL CHECKOUT AND TROUBLESHOOTING PROCEDURES WORK PACKAGES		3-5.3.4.6	<opcheckwp> <tswp> <opcheck-tswp>
REAR MATTER	R	5.3.2	<rear>
Glossary		5.3.2.1	<glossary>
Alphabetical index		5.3.2.2	<aindx>
Foldout pages		5.3.2.3	<foldsect>
DA Form 2028	R	5.3.2.4	<da2028>
Authentication page	R	5.3.2.5	<authent>
Back cover	R	5.3.2.6	<back>

Legend

R	Required
NR	No Required
O	Optional
Shaded	As Required

Table A.8 TM Requirements Matrix for _____

TM Content	Aircraft PMS	MIL-STD-40051 Reference	Element Name
FRONT MATTER	R	5.3.1	<frnt>
Front cover	R	5.3.1.1	<frntcover>
Warning summary data	R	5.3.1.2	<warnsum>
Change transmittal page	R	5.3.1.3	<chgsheet>
GENERAL INFORMATION WORK PACKAGE	R	5.3.1.10	<pms-ginfowp>
Maintenance activities	R	5.3.1.10.1	<scope>
General information	R	5.3.1.10.2	<geninfo>
CHAPTER X. MAINTENANCE INFORMATION CHAPTER	R	4- 5.3	<mim>
PMS INSPECTION WORK PACKAGE	R	4- 5.3.4.12	<pms-inspecwp>
Checklist data	R	4- 5.3.4.12	<pms-form>
REAR MATTER	R	5.3.2	<rear>
DA Form 2028	R	5.3.2.4	<da2028>
Authentication page	R	5.3.2.5	<authent>
Back cover	R	5.3.2.6	<back>

Legend

R Required
NR Not Required
O Optional
Shaded As Required

Table A.9 TM Requirements Matrix for ————

TM Content	Aircraft PM	MIL-STD-40051A Reference	Element Name
FRONT MATTER	R	5.3.1	<frnt>
Cover page	R	5.3.1.1	<frntcover>
Warning summary data	R	5.3.1.2	<warnsum>
Change transmittal page	R	5.3.1.3	<chgsheet>
GENERAL INFORMATION WORK PACKAGE	R	5.3.1.11	<pm-ginfowp>
CHAPTER X. MAINTENANCE INFORMATION CHAPTER	R	4- 5.3	<mim>
PM INSPECTION WORK PACKAGE	R	4- 5.3.4.11	<pmi-cklistwp>
General inspection	R	4- 5.3.4.11.2	<geninspec>
Aircraft area inspection	R	4- 5.3.4.11.2	<areainspec>
Aircraft power on checks	R	4- 5.3.4.11.2	<pwron-inspec>
Aircraft final inspection	R	4- 5.3.4.11.2	<finalinspec>
REAR MATTER	R	5.3.2	<rear>
DA Form 2028	R	5.3.2.4	<da2028>
Authentication page	R	5.3.2.5	<authent>
Back cover	R	5.3.2.6	<back>

Legend

R Required
NR Not Required
O Optional
Shaded As Required

Table A.10 TM Requirements Matrix for _____

TM Content	Operator's	MIL-STD-40051A Reference	Element Name
INTRODUCTORY MATTER	R	5.4.1	<frnt>
IETM Installation data	R	5.4.1.1	<howtouse>
CD content frame	R	5.4.1.2	<ietm.contents>
Revision summary frame	R	5.4.1.3	<loepwp>
Identification information	R	5.4.1.4	<frntcover>
List of contents	R	5.4.1.5	<contents>
How to use this IETM	R	5.4.1.6	<howtouse>
ABBREVIATIONS, ACRONYMS, AND UNCOMMON TERMS WORK PACKAGE	R	5.4.2	<abbrevwp>
SYMBOLS WORK PACKAGE	R	5.4.2	<symbolwp>
GENERAL INFORMATION WORK PACKAGE	R	5.4.1.7	<ginfowp>
Scope	R	5.4.1.7.1	<scope>
Reporting errors and recommending improvements statement	R	5.4.1.7.2	<reporting>
Maintenance forms, records, and reports	R	5.4.1.7.3	<mfrr>
Reporting equipment improvement recommendations (EIR)	R	5.4.1.7.4	<eir>
Hand receipt (HR) information		5.4.1.7.5	<handreceipt>
Corrosion prevention and control (CPC)	R	5.4.1.7.6	<cpcdata>
Ozone depleting substances(ODS)	R	5.4.1.7.7	<odsdata>
Destruction of Army materiel to prevent enemy use	R	5.4.1.7.8	<destructmat>
Preparation for storage or shipment	R	5.4.1.7.9	<pssref>
Warranty information		5.4.1.7.10	<wrntyref>
Nomenclature cross-reference list		5.4.1.7.11	<nomenreflist>
List of abbreviations/acronyms		5.4.1.7.12	<loa>
Quality assurance (QA) (aviation only)		5.4.1.7.13	<qainfo>

Table A.10 TM Requirements Matrix for _____

TM Content	Operator's	MIL-STD-40051A Reference	Element Name
Quality of material	R	5.4.1.7.14	<qual.mat.info>
Safety, care, and handling	R	5.4.1.7.15	<sftyinfo>
Nuclear hardness		5.4.1.7.16	<hcp>
Security measures for electronic data		5.4.1.7.17	<secref>
Calibration		5.4.1.7.18	<calref>
Copyright credit line		5.4.1.7.24	<copyrt>
DESCRIPTION AND THEORY OF OPERATION	R	1- 5.1	<gim>
EQUIPMENT DESCRIPTION AND DATA WORK PACKAGE	R	1- 5.2	<descwp>
Equipment characteristics, capabilities, and features	R	1- 5.2.1	<eqpinfo>
Location and description of major components	R	1- 5.2.2	<locdesc>
Differences between models		1- 5.2.3	<eqpdiff>
Equipment data	R	1- 5.2.4	<eqpdata>
Equipment configuration		1- 5.2.5	<eqpconfig>
THEORY OF OPERATION WORK PACKAGE	R	1- 5.3	<thrywp>
OPERATOR INSTRUCTIONS	R	2- 5.1	<opim>
DESCRIPTION AND USE OF OPERATOR CONTROLS AND INDICATORS WORK PACKAGE	R	2- 5.2.3.2	<ctrlindwp>
OPERATION UNDER USUAL CONDITIONS WORK PACKAGE	R	2-5.2.3.3	<opusualwp>
Siting requirements		2- 5.2.3.3.2	<site>
Shelter requirements		2- 5.2.3.3.3	<shelter>
Assembly and preparation for use		2- 5.2.3.3.4	<prepforuse>
Initial adjustments, before use and self-test		2- 5.2.3.3.5	<initial>

Table A.10 TM Requirements Matrix for _____

TM Content	Operator's	MIL-STD-40051A Reference	Element Name
Operating procedures	R	2- 5.2.3.3.6	<oper>
Decals and instruction plates		2- 5.2.3.3.6.2	<instructplt>
Operating auxiliary equipment		2- 5.2.3.3.7	<operaux>
Preparation for movement		2- 5.2.3.3.8	<prepmove>
OPERATION UNDER UNUSUAL CONDITIONS WORK PACKAGE	R	2- 5.2.3.4	<opunuwp>
Unusual environment / weather		2- 5.2.3.4.2	<unusualenv>
Fording and swimming		2- 5.2.3.4.3	<fording>
Interim nuclear, biological, and chemical (NBC) decontamination procedures		2- 5.2.3.4.4	<decon>
Jamming and electronic countermeasures (ECM) procedures		2- 5.2.3.4.5	<ecm>
Emergency procedures		2- 5.2.3.4.6	<emergency>
STOWAGE AND DECAL / DATA PLATE GUIDE WORK PACKAGE		2- 5.2.3.5	<stowagewp>
ON-VEHICLE EQUIPMENT LOADING PLAN WORK PACKAGE		2- 5.2.3.6	<eqploadwp>
TROUBLESHOOTING PROCEDURES	R	3- 5.3	<tim>
TROUBLESHOOTING INDEX WORK PACKAGE		3- 5.3.4.2	<tsindxwp>
OPERATIONAL CHECKOUT AND TROUBLESHOOTING PROCEDURES WORK PACKAGE	R	3- 5.3.4.6	<opcheck-tswp> <tswp> <opcheck-tswp>
MAINTENANCE INSTRUCTIONS NOTE All maintenance work packages shall include a title block, initial setup, and all maintenance tasks applicable to the equipment.	R	4- 5.3	<mim>

Table A.10 TM Requirements Matrix for _____

TM Content	Operator's	MIL-STD-40051A Reference	Element Name
PMCS INTRODUCTION WORK PACKAGE	R	4-5.3.4.3.1	<pmcsintrowp>
PMCS, INCLUDING LUBRICATION INSTRUCTIONS, WORK PACKAGE	R	4- 5.3.4.3.2	<pmcswp>
MAINTENANCE WORK PACKAGES **NOTE** As applicable, the following maintenance tasks shall be presented in the general order listed below:	R	5- 5.3.4.9	<maintwp>
Assembly and preparation for use (aviation only)		4- 5.3.4.9.1.2	<prepforuse>
Servicing		4- 5.3.4.9.1.3	<service>
Ground handling		4- 5.3.4.9.1.4	<groundtsk>
Inspection of installed items		4- 5.3.4.9.1.5	<inspinstitm>
Removal		4- 5.3.4.9.1.6	<remove>
Disassembly		4- 5.3.4.9.1.7	<disassem>
Cleaning		4- 5.3.4.9.1.8	<clean>
Inspection - acceptance and rejection criteria		4- 5.3.4.9.1.9	<acptrejinsp>
Nondestructive testing inspection (NDTI)		4- 5.3.4.9.1.10	<ndti>
Repair or replacement		4- 5.3.4.9.1.11	<repair-rplc>
Alignment		4- 5.3.4.9.1.12	<align>
Painting		4- 5.3.4.9.1.13	<paint>
Lubrication		4- 5.3.4.9.1.14	<lube>
Assembly		4- 5.3.4.9.1.15	<assem>
Test and inspection		4- 5.3.4.9.1.16	<test-inspect>
Installation		4- 5.3.4.9.1.17	<install>
Adjustment		4- 5.3.4.9.1.18	<adjust>
Calibration		4- 5.3.4.9.1.19	<calibration>

Table A.10 TM Requirements Matrix for _____

TM Content	Operator's	MIL-STD-40051A Reference	Element Name
Radio interference suppression		4- 5.3.4.9.1.20	<ris>
Placing in service		4- 5.3.4.9.1.21	<pis>
Testing		4- 5.3.4.9.1.22	<test-pass>
Preparation for storage or shipment		4- 5.3.4.9.1.25	<pss>
Classification of defects		4- 5.3.4.9.1.26	<ammo.defect>
Handling ammunition		4- 5.3.4.9.1.27	<ammo.handling>
Ammunition markings		4- 5.3.4.9.1.28	<ammo.markings>
Procedures for ammunition activation		4- 5.3.4.9.1.29	<arm>
AMMUNITION MAINTENANCE WORK PACKAGE		4- 5.3.4.6	<ammowp>
AUXILIARY EQUIPMENT MAINTENANCE WORK PACKAGE		4- 5.3.4.7	<auxeqpwp>
SUPPORTING INFORMATION NOTE Applicable supporting information work packages shall be arranged in the order in which they are presented here and numbered accordingly.	R	6- 5.1	<sim>
REFERENCES WORK PACKAGE	R	6- 5.2	<refwp>
COMPONENTS OF END ITEM (COEI) AND BASIC ISSUE ITEMS (BII) LISTS WORK PACKAGE	R	6- 5.5	<coeibiiwp>
ADDITIONAL AUTHORIZATION LIST (AAL) WORK PACKAGE		6- 5.6	<aalwp>
EXPENDABLE AND DURABLE ITEMS LIST WORK PACKAGE		6- 5.7	<explistwp>
SUPPORT ITEMS WORK PACKAGE		6- 5.11	<supitemwp>
ADDITIONAL SUPPORTING WORK PACKAGES		6- 5.12	<genwp>

Table A.10 TM Requirements Matrix for _____

TM Content	Operator's	MIL-STD-40051A Reference	Element Name
PARTS INFORMATION		5- 5.2.1	<pim>
Parts information data base		5- 5.2.1.1	<pidb>

Legend

R	Required
NR	Not Required
O	Optional
Shaded	As Required

Table A.11 TM Requirements Matrix for _____

TM Content	Unit, Direct Support (DS) and General Support (GS)	AVUM/ AVIM	MIL-STD-40051A Reference	Element Name
INTRODUCTORY MATTER	R	R	5.4.1	<frnt >
IETM Installation data	R	R	5.4.1.1	<howtouse>
CD content frame	R	R	5.4.1.2	<ietm.content>
Revision summary frame	R	R	5.4.1.3	<loepwp>
Identification information	R	R	5.4.1.4	<frnt cover>
List of contents	R	R	5.4.1.5	<contents>
How to use this IETM	R	R	5.4.1.6	<howtouse>
ABBREVIATIONS, ACRONYMS, AND UNCOMMON TERMS WORK PACKAGE	R	R	5.4.2	<abbrevwp>
SYMBOLS WORK PACKAGE	R	R	5.4.2	<symbolwp>
GENERAL INFORMATION WORK PACKAGE	R	R	5.4.1.7	<ginfowp>
Scope	R	R	5.4.1.7.1	<scope>
Reporting errors and recommending improvements statement	R	R	5.4.1.7.2	<reporting>
Maintenance forms, records, and reports	R	R	5.4.1.7.3	<mfrr>
Reporting equipment improvement recommendations (EIR)	R	R	5.4.1.7.4	<eir>
Hand receipt (HR) information			5.4.1.7.5	<handreceipt>
Corrosion prevention and control (CPC)	R	R	5.4.1.7.6	<cpcdata>
Ozone depleting substances (ODS)	R	R	5.4.1.7.7	< odsdata>
Destruction of Army materiel to prevent enemy use	R	R	5.4.1.7.8	<destructmat>
Preparation for storage or shipment	R	R	5.4.1.7.9	<pssref>
Warranty information			5.4.1.7.10	<wrntyref>
Nomenclature cross-reference list			5.4.1.7.11	<nomenreflist>
List of abbreviations/acronyms			5.4.1.7.12	<loa>
Quality assurance (QA) (aviation only)			5.4.1.7.13	<qainfo>
Quality of material	R	R	5.4.1.7.14	<qual.mat.info>
Safety, care, and handling	R	R	5.4.1.7.15	<sftyinfo>

Table A.11 TM Requirements Matrix for _____

TM Content	Unit, Direct Support (DS) and General Support (GS)	AVUM/ AVIM	MIL-STD-40051A Reference	Element Name
Nuclear hardness			5.4.1.7.16	<hcp>
Security measures for electronic data			5.4.1.7.17	<secref>
Calibration			5.4.1.7.18	<calref>
Copyright credit line			5.4.1.7.24	<copyrt>
DESCRIPTION AND THEORY OF OPERATION	R	R	1- 5.1	<gim>
EQUIPMENT DESCRIPTION AND DATA WORK PACKAGE	R	R	1- 5.2	<descwp>
Equipment characteristics, capabilities, and features	R	R	1- 5.2.1	<eqpinfo>
Location and description of major components	R	R	1- 5.2.2	<locdesc>
Differences between models			1- 5.2.3	<eqpdiff>
Equipment data	R	R	1- 5.2.4	<eqpdata>
Equipment configuration			1- 5.2.5	<eqpconfig>
THEORY OF OPERATION WORK PACKAGE	R	R	1- 5.3	<thrywp>
TROUBLESHOOTING PROCEDURES	R	R	3- 5.3	<tim>
TROUBLESHOOTING INDEX WORK PACKAGE			3- 5.3.4.2	<tsindxwp>
OPERATIONAL CHECKOUT AND TROUBLESHOOTING PROCEDURES WORK PACKAGE	R	R	3- 5.3.4.6	<opcheckwp> <tswp> <opcheck-tswp>
MAINTENANCE INSTRUCTIONS **NOTE** All maintenance work packages shall include a title block, initial setup, and all maintenance tasks applicable to the equipment.	R		4- 5.3	<mim>
SERVICE UPON RECEIPT WORK PACKAGE	R	R	4- 5.3.4.1	<surwp>
Siting			4- 5.3.4.1.1	<siting>
Shelter requirements			4- 5.3.4.1.2	<shltr>
Service upon receipt of materiel			4- 5.3.4.1.3	<surmat>

Table A.11 TM Requirements Matrix for _____

TM Content	Unit, Direct Support (DS) and General Support (GS)	AVUM/ AVIM	MIL-STD-40051A Reference	Element Name
Installation instructions			4- 5.3.4.1.4	<install>
Preliminary servicing of equipment			4- 5.3.4.1.5	<preserv>
Preliminary checks and adjustment of equipment			4- 5.3.4.1.6	<prechkadj>
Preliminary calibration of equipment			4- 5.3.4.1.7	<precal>
Circuit alignment			4- 5.3.4.1.8	<calign>
Ammunition markings			4- 5.3.4.1.9	<ammo.markings>
Classification of defects			4- 5.3.4.1.10	<ammo.defect>
Ammunition handling			4- 5.3.4.1.11	<ammo.handling>
Procedures to activate ammunition			4- 5.3.4.1.12	<arm>
EQUIPMENT / USER FITTING INSTRUCTIONS WORK PACKAGE (personal use equipment)			4- 5.3.4.2	<perseqpwp>
PMCS INTRODUCTION WORK PACKAGE	R	NR	4-5.3.4.3.1	<pmcsintrowp>
PMCS, INCLUDING LUBRICATION INSTRUCTIONS, WORK PACKAGE	R	NR	4- 5.3.4.3	<pmcswp>
MAINTENANCE WORK PACKAGES **NOTE** As applicable, the following maintenance tasks shall be presented in the general order listed below:	R	R	4- 5.3.4.9	<maintwp>
Assembly and preparation for use (aviation only)			4- 5.3.4.9.1.2	<prepforuse>
Servicing			4- 5.3.4.9.1.3	<service>
Ground handling			4- 5.3.4.9.1.4	<groundtsk>
Inspection of installed items			4- 5.3.4.9.1.5	<inspinstitm>
Removal			4- 5.3.4.9.1.6	<remove>
Disassembly			4- 5.3.4.9.1.7	<disassem>
Cleaning			4- 5.3.4.9.1.8	<clean>
Inspection - acceptance and rejection criteria			4- 5.3.4.9.1.9	<acptrejinsp>

Table A.11 TM Requirements Matrix for _____

TM Content	Unit, Direct Support (DS) and General Support (GS)	AVUM/ AVIM	MIL-STD-40051A Reference	Element Name
Nondestructive testing inspection (NDTI)			4- 5.3.4.9.1.10	<ndti>
Repair or replacement			4- 5.3.4.9.1.11	<repair-rplc>
Alignment			4- 5.3.4.9.1.12	<align>
Painting			4- 5.3.4.9.1.13	<paint>
Lubrication			4- 5.3.4.9.1.14	<lube>
Assembly			4- 5.3.4.9.1.15	<assem>
Test and inspection			4- 5.3.4.9.1.16	<test-inspect>
Installation			4- 5.3.4.9.1.17	<install>
Adjustment			4- 5.3.4.9.1.18	<adjust>
Calibration			4- 5.3.4.9.1.19	<calibration>
Radio interference suppression			4- 5.3.4.9.1.20	<ris>
Placing in service			4- 5.3.4.9.1.21	<pis>
Testing			4- 5.3.4.9.1.22	<test-pass>
Overhaul and retirement schedule (aircraft only)			4- 5.3.4.9.1.24	<orsch>
Preparation for storage or shipment			4- 5.3.4.9.1.25	<pss>
Classification of defects			4- 5.4.5.8.1.26	<ammo.defect>
Handling ammunition			4- 5.3.4.9.1.27	<ammo.handling>
Ammunition markings			4- 5.3.4.9.1.28	<ammo.markings>
Procedures for ammunition activation			4- 5.3.4.9.1.29	<arm>
GENERAL MAINTENANCE WORK PACKAGE			4-5.3.4.10	<gen.maintwp>
PHASED MAINTENANCE INSPECTION WORK PACKAGE (AIRCRAFT ONLY)			4-5.3.4.11	<pmi-cklistwp>
PREVENTIVE MAINTENANCE INSPECTIONS WORK PACKAGE (AIRCRAFT ONLY)			4-5.3.4.4	<pmiwp>
AMMUNITION MAINTENANCE WORK PACKAGE			4- 5.3.4.6	<ammowp>

Table A.11 TM Requirements Matrix for _____

TM Content	Unit, Direct Support (DS) and General Support (GS)	AVUM/ AVIM	MIL-STD-40051A Reference	Element Name
AUXILIARY EQUIPMENT MAINTENANCE WORK PACKAGE			4- 5.3.4.7	<auxeqpwp>
ILLUSTRATED LIST OF MANUFACTURED ITEMS WORK PACKAGE	R	R	4- 5.3.4.14	<manuwp>
TORQUE LIMITS WORK PACKAGE	R	R	4- 5.3.4.15	<torquewp>
AMMUNITION MARKING INFORMATION WORK PACKAGE			4- 5.3.4.16	<ammo.markingwp>
FOREIGN AMMUNITION (NATO) WORK PACKAGE			4- 5.3.4.17	<natowp>
AIRCRAFT INVENTORY MASTER GUIDE WORK PACKAGE			4- 5.3.4.18	<inventorywp>
STORAGE OF AIRCRAFT WORK PACKAGE	NR	R	4- 5.3.4.19	<storagewp>
WEIGHING AND LOADING WORK PACKAGE (AIRCRAFT ONLY)	NR	R	4- 5.3.4.20	<wtloadwp>
WIRING DIAGRAMS WORK PACKAGE	R	R	4- 5.3.4.23	<wiringwp>
SUPPORTING INFORMATION **NOTE** Applicable supporting information work packages shall be arranged in the order in which they are presented here and numbered accordingly.			6- 5.1	<sim>
REFERENCES WORK PACKAGE	R	R	6- 5.2	<refwp>
INTRODUCTION FOR STANDARD FORMAT MAC WORK PACKAGE	R (Unit only)	NR	6- 5..3.1	<macintrowp>
INTRODUCTION FOR THREE-LEVEL ARMY AVIATION MAC WORK PACKAGE	NR	R (AVUM only)	6- 5.3.2	<macintrowp>
MAC WORK PACKAGE	R (Unit only)	R (AVUM only)	6- 5.3.3	<macwp>
EXPENDABLE AND DURABLE ITEMS LIST WORK PACKAGE			6- 5.7	<explistwp>
TOOL IDENTIFICATION LIST WORK PACKAGE			6- 5.8	<toolidwp>

Table A.11 TM Requirements Matrix for _____

TM Content	Unit, Direct Support (DS) and General Support (GS)	AVUM/ AVIM	MIL-STD-40051A Reference	Element Name
MANDATORY REPLACEMENT PARTS WORK PACKAGE	R	R	6- 5.9	<mrplwp>
CRITICAL SAFETY ITEMS(CSI) AND FLIGHT SAFETY CRITICAL AIRCRAFT PARTS (FSCAP) WORK PACKAGE		R	6- 5.10	<csi.fscap.wp>
SUPPORT ITEMS WORK PACKAGE			6-5.11	<supitemwp>
ADDITIONAL SUPPORTING WORK PACKAGES			6- 5.12	<genwp>
PARTS INFORMATION			5- 5.2.1	<pim >
Parts information data base			5- 5.2.1.1	<pidb>

Legend

R Required
NR Not Required
O Optional
Shaded As Required

Table A.12 TM Requirements Matrix for _____

TM Content	DMWR	MIL-STD-40051A Reference	Element Name
INTRODUCTORY MATTER	R	5.4.1	<frnt >
IETM Installation data	R	5.4.1.1	<howtouse>
CD content frame	R	5.4.1.2	<ietm.contents>
Revision summary frame	R	5.4.1.3	<loepwp >
Identification information	R	5.4.1.4	<frntcover>
List of contents	R	5.4.1.5	<contents>
How to use this IETM	R	5.4.1.6	<howtouse>
ABBREVIATIONS, ACRONYMS, AND UNCOMMON TERMS WORK PACKAGE	R	5.4.2	<abbrevwp>
SYMBOLS WORK PACKAGE	R	5.4.2	<symbolwp>
GENERAL INFORMATION WORK PACKAGE	R	5.4.1.7	<ginfowp>
Scope	R	5.4.1.7.1	<scope>
Reporting errors and recommending improvements statement	R	5.4.1.7.2	<reporting>
Maintenance forms, records, and reports	R	5.4.1.7.3	<mfrr>
Reporting equipment improvement recommendations (EIR)	R	5.4.1.7.4	<eir>
Hand receipt (HR) information		5.4.1.7.5	<handreceipt>
Corrosion prevention and control (CPC)	R	5.4.1.7.6	<cpcdata>
Ozone depletingsubstances(ODS)	R	5.4.1.7.7	<odsdata>
Destruction of Army materiel to prevent enemy use	R	5.4.1.7.8	<destructmat>
Preparation for storage or shipment	R	5.4.1.7.9	<pssref>
Warranty information		5.4.1.7.10	<wrntyref>
Nomenclature cross-reference list		5.4.1.7.11	<nomenreflist>
List of abbreviations/acronyms		5.4.1.7.12	<loa>
Quality assurance (QA) (aviation only)		5.4.1.7.13	<qainfo>
Quality of material	R	5.4.1.7.14	<qual.mat.info>
Safety, care, and handling	R	5.4.1.7.15	<sftyinfo>

Table A.12 TM Requirements Matrix for _____

TM Content	DMWR	MIL-STD-40051A Reference	Element Name
Nuclear hardness		5.4.1.7.16	<hcp>
Security measures for electronic data		5.4.1.7.17	<secref>
Calibration		5.4.1.7.18	<calref>
Engineering change proposals (ECP)	R	5.4.1.7.19	<ecp>
Deviations and exceptions	R	5.4.1.7.20	<deviation>
Mobilization requirements	R	5.4.1.7.21	<mobreq>
Flight safety critical aircraft parts (FSCAP)	R	5.4.1.7.22	<fscapreq>
Cost considerations	R	5.4.1.7.23	<cost>
Copyright credit line		5.4.1.7.24	<copyrt>
DESCRIPTION AND THEORY OF OPERATION	R	1- 5.1	<gim>
EQUIPMENT DESCRIPTION AND DATA WORK PACKAGE	R	1- 5.2	<descwp>
Equipment characteristics, capabilities, and features	R	1- 5.2.1	<eqpinfo>
Location and description of major components	R	1- 5.2.2	<locdesc>
Differences between models		1- 5.2.3	<eqpdiff>
Equipment data	R	1- 5.2.4	<eqpdata>
Equipment configuration		1- 5.2.5	<eqpconfig>
THEORY OF OPERATION WORK PACKAGES		1- 5.3	<thrywp>
CHAPTER X. TROUBLESHOOTING PROCEDURES	R	3- 5.3	<tim>
PRESHOP ANALYSIS WORK PACKAGE	R	3- 5.3.4.3	<pshopanalwp>
COMPONENT CHECKLIST WORK PACKAGE	R	3- 5.3.4.4	<compchklistwp>
COMBINED OPERATIONAL CHECKOUT AND TROUBLESHOOTING WORK PACKAGE		3- 5.3.4.6.5	<opcheck-tswp>

Table A.12 TM Requirements Matrix for _____

TM Content	DMWR	MIL-STD-40051A Reference	Element Name
DEPOT MAINTENANCE INSTRUCTIONS **NOTE** All maintenance work packages shall include a title block, initial setup, and all maintenance tasks applicable to the equipment.	R	4 - 5.3	<mim>
MAINTENANCE WORK PACKAGES **NOTE** As applicable, the following maintenance tasks shall be presented in the general order listed below:	R	5 - 5.4.5.8	<maintwp>
Servicing		4- 5.3.4.9.1.3	<service>
Ground handling		4- 5.3.4.9.1.4	<groundtsk>
Inspection of installed items		4- 5.3.4.9.1.5	<inspinstitm>
Removal		4- 5.3.4.9.1.6	<remove>
Disassembly		4- 5.3.4.9.1.7	<disassem>
Cleaning		4- 5.3.4.9.1.8	<clean>
Inspection - acceptance and rejection criteria		4- 5.3.4.9.1.9	<acptrejinsp>
Nondestructive testing inspection (NDTI)		4- 5.3.4.9.1.10	<ndti>
Repair or replacement		4- 5.3.4.9.1.11	<repair-rplc>
Alignment		4- 5.3.4.9.1.12	<align>
Painting		4- 5.3.4.9.1.13	<paint>
Lubrication		4- 5.3.4.9.1.14	<lube>
Assembly		4- 5.3.4.9.1.15	<assem>
Test and inspection		4- 5.3.4.9.1.16	<test-inspect>
Installation		4- 5.3.4.9.1.17	<install>
Adjustment		4- 5.3.4.9.1.18	<adjust>
Calibration		4- 5.3.4.9.1.19	<calibration>
Radio interference suppression		4- 5.3.4.9.1.20	<ris>
Placing in service		4- 5.3.4.9.1.21	<pis>
Testing		4- 5.3.4.9.1.22	<test-pass>
Preservation, packaging, and marking	R	4- 5.3.4.9.1.23	<ppm>

Table A.12 TM Requirements Matrix for _____

TM Content	DMWR	MIL-STD-40051A Reference	Element Name
Preparation for storage or shipment		4- 5.3.4.9.1.25	<pss>
FACILITIES WORK PACKAGE		4- 5.3.4.8	<facilwp>
OVERHAUL INSPECTION PROCEDURES (OIP) WORK PACKAGE	R	4- 5.3.4.13	<oipwp>
DEPOT MOBILIZATION REQUIREMENTS WORK PACKAGE	R	4- 5.3.4.21	<mobilwp>
QUALITY ASSURANCE REQUIREMENTS WORK PACKAGE	R	4- 5.3.4.22	<qawp>
SUPPORTING INFORMATION **NOTE** Applicable supporting information work packages shall be arranged in the order in which they are presented here and numbered accordingly.	R	6 - 5.1	<sim>
REFERENCES	R	6 - 5.2	<refwp>
EXPENDABLE AND DURABLE ITEMS LIST		6 - 5.7	<explistwp>
TOOL IDENTIFICATION LIST WORK PACKAGE	R	6- 5.8	<toolidwp>
MANDATORY REPLACEMENT PARTS WORK PACKAGE	R	6- 5.9	<mrplwp>
CRITICAL SAFETY ITEMS (CSI) AND FLIGHT SAFETY CRITICAL AIRCRAFT PARTS (FSCAP) WORK PACKAGE	R	6- 5.10	<csi.fscap.wp>
SUPPORT ITEMS WORK PACKAGE		6- 5.11	<supitemwp>
ADDITIONAL SUPPORTING WORK PACKAGES		6 - 5.12	<genwp>
PARTS INFORMATION		5- 5.2.1	<pim>
Parts information data base		5- 5.2.1.1	<pidb>

Legend
R Required
NR Not Required
O Optional
Shaded As Required

REMARKS FOR TABLE

INDEX

	PART	PARAGRAPH	PAGE
A			
AAL work package	6	5.6	15
AAL List	6	5.6.2	16
Abbreviations	B	4.8.17	30
Abbreviations	B	4.9.14	45
Abbreviations/acronyms, list of	B	5.3.1.9.11	63
Abbreviations, list of	B	5.4.1.7.12	80
Abbreviations, wiring diagrams	4	5.3.4.23.3	42
Abbreviations WP	B	5.4.2a	89
Acceptance inspections	4	5.3.4.22.6	42
Acquiring activity	B	3.2	8
Acquisition requirements	B	A.5.3	117
Acronyms	B	4.8.17	30
Acronyms	B	4.9.14	45
Acronyms	B	3.1	5
Additional Authorization List (AAL)	B	3.3	8
Additional introductory WPs	B	5.4.2	89
Additional source data	B	5.1d	55
Additional work packages	6	5.12	19
Adjust	B	3.4	8
Adjustment	4	5.3.4.9.1.18	27
Aircraft inventory master guide WP	4	5.3.4.18	38
Aircraft lubrication instructions WP	4	5.3.4.5	18
Alerts	B	4.9.4	41
Align	B	3.5	8
Alignment	4	5.3.4.9.1.12	25
Alignment procedures	4	5.3.4.1.8c	12
Ammunition			
Activation procedures	4	5.3.4.9.1.29	31
Activation procedures	4	5.3.4.1.12	12
Classification of defects	4	5.3.4.1.10	12
DODAC	B	3.36	10
Foreign ammo WP	4	5.3.4.17	38
Inspection of	4	5.3.4.9.1.16.1	26
Maintenance WP	4	5.3.4.6	19
Marking	4	5.3.4.9.1.28	31
Marking information WP	4	5.3.4.16	37
Markings	4	5.3.4.1.9	12
ANSI	B	3.6	8
APPLICABLE DOCUMENTS	B	2.0	1
Area diagram	4	5.3.4.12.2	34
Army Master Data File	B	3.7	8
Army Oil Analysis Program	B	3.8	8
Arrowheads	B	4.9.24.3.5	51
Arrowheads	B	4.8.27.3.5	38
Assembled item	B	3.9	8
Assembled items	5	5.3.6.8f	14
Assembly	4	5.3.4.9.1.15	25
Assembly	B	3.10	8
Assembly and preparation for use	4	5.3.4.9.1.2	22
Assembly and preparation for use	2	5.2.3.3.4	6

INDEX

	PART	PARAGRAPH	PAGE
Assembly of equipment	4	5.3.4.1.4.1	9
Authentication page	B	5.3.2.5	73
Automatic testing and troubleshooting	3	5.1.1.2	4
Auxiliary equipment	B	3.11	8
Auxiliary equipment maintenance WP	4	5.3.4.7	19
Auxiliary equipment, operating	2	5.2.3.3.7	8
Availability	B	3.126	17
Availability notice	B	5.3.1.1.2	57
Availability statement	B	5.4.1.4.2	76
Aviation Intermediate Maintenance	B	3.12	8
Aviation MAC - Introduction	6	5.3.2	6
Aviation Unit Maintenance	B	3.13	8

B

Back cover	B	5.3.2.6	74
Basic Issue Item	B	3.14	8
Basic Issue items/special tools	5	5.3.6.10	15
Basic Issue Item Work Package	6	5.5	13
Basis of Issue	B	3.15	9
Basis of issue	5	5.3.7.2	15
BII list	6	5.5.2.2	15
Blank page backing a classified page	B	4.8.22.3	32
Blank pages	B	4.8.16.2.1.2	30
Block diagrams	B	3.16	9
Border rules and boxes	B	4.9.24.3.1	50
Border rules and boxes	B	4.8.27.3.1	37
Built-in tests, systems with	3	5.1.2.2.1	4
Built-in test equipment	B	3.17	9
Bulk material	B	3.18	9
Bulk figure	5	5.3.8.4	16

C

CAGEC	B	3.22	9
CAGEC column	5	5.3.6.7	13
Calibrate	B	3.19	9
Calibration	B	5.4.1.7.18	81
Calibration	4	5.3.4.9.1.19	27
Calibration	B	5.3.1.9.17	64
Callout	B	3.20	9
Callouts	B	4.8.27.3.4	38
Callouts	B	4.9.24.3.4	50
CALS raster	B	3.21	9
CALS	B	3.29	10
Cautions	B	4.9.5	41
Cautions	B	4.8.7	24
Display requirements for	B	4.9.5.1.1	41
Use and placement of	B	4.9.5.1	41
Use and placement of	B	4.8.7.1	24
CD content frame	B	5.4.1.2	75
Certification requirements	4	5.3.4.22.4	41

INDEX

	PART	PARAGRAPH	PAGE
Change date	B	5.3.1.1.7	57
Change designator	B	5.3.1.1.7	57
Change transmittal sheet	B	5.3.1.3	58
Change transmittal page	B	4.8.16.2.1.1c	30
Changed items on RPSTLS	B	4.10.1.6b	53
Changes	B	4.10	52
Changes	B	4.10.1.1	52
Changed front and rear matter	B	4.10.1.3	52
Changed work packages	B	4.10.1.2	52
Page-based TMs	B	4.10.1	52
RPSTLs	B	4.10.1.6	53
Symbols for graphics	B	4.10.1.5	53
Symbols	B	4.10.1.4	52
Changes from previous issue	B	6.5	90
Chapter numbering	B	4.8.8.2	25
Chapter title page	B	4.8.8.1	25
Chapters	B	4.8.2.2	21
Chapters	B	4.8.8	25
Charts and graphs	B	4.8.27.2.6	37
Checking attached documents	3	5.3.4.3.1c	9
Checking unpacked equipment	4	5.3.4.1.3b	7
Checklist	3	5.3.4.3.1g(2)	10
Circuit alignment	4	5.3.4.1.8	11
Classification of defects	4	5.3.4.9.1.26	30
Classification of defects	4	5.3.4.1.10	12
Cleaning	4	5.3.4.9.1.8	24
Cleaning and preservation	3	5.3.4.3.1e	9
COEI list	6	5.5.2	15
Color, use of in graphics	B	4.8.27.4.9	39
Color, use of in graphics	B	4.9.24.4.5	51
Combined operational checkout & troubleshooting WP	3	5.3.4.6.5	14
Combined operational checkout & troubleshooting procedure	3	5.3.4.6.5d(1)	14
Commodity Command Standard System	B	3.23	9
Common test sets, systems requiring	3	5.1.2.2.3	5
Common tools and equipment	B	5.3.1.9.24.1	66
Component	B	3.26	9
Component checklist work package	3	5.3.4.4	10
Component checklist	3	5.3.4.3.1f	9
Component checklist	3	5.3.4.4.2	10
Components list	5	5.3.7.4	16
Components of End Item	B	3.27	9
Components of End Item Work Package	6	5.5	13
Comprehensibility	B	3.28	9
Comprehensibility	B	4.8.26	35
Computer Graphics Metafile	B	3.30	10
COMSEC manuals	B	5.3.1.1.8	57
COMSEC manuals	B	5.4.1.4.7	76
COMSEC protective markings	B	4.8.22.6	32

INDEX

	PART	PARAGRAPH	PAGE
Content			
List of	B	5.4.1.5	76
Operational checkout	3	5.3.4.6.1	11
Preparation of	B	5.1	55
Content frame	B	5.4.1.2	75
Content Selection Matrixes	B	Appendix A	115
Content structure and format	1	4.5	2
Content structure and format	2	4.5	2
Content structure and format	3	4.7	2
Content structure and format	4	4.7	2
Content structure and format	5	4.4	2
Content structure and format	6	4.5	2
Continuous tone photographs/drawings	B	3.31	10
Controls and indicators	3	5.3.4.5b	11
Copyright credit line	B	5.3.1.9.23	66
Copyright credit line	B	5.4.1.7.24	83
Corrosion prevention and control	B	5.4.1.7.6	79
Corrosion prevention and control	B	3.32	10
Corrosion prevention and control	B	5.3.1.9.5	62
Cost considerations	B	5.4.1.7.23	83
Cost considerations	B	5.3.1.9.22	66
Cover	B	4.8.16.2.1.1a	30
Cover	B	5.3.1.1	56
Back	B	5.3.2.6	74
Current as of date	B	3.33	10
EIC	B	3.48	11
Equipment nomenclature	B	3.51	11
IETM	B	5.4.1.4	75
Covering	4	5.3.4.9.1.4	23 Credit
lines	B	4.8.27.3.3	38
Credit lines	B	4.9.24.3.3	50
Critical safety items & FSCAP WP	6	5.10	18
Critical safety items	6	5.10.1	18
Cross-reference index work packages	5	5.3.8	16
Current as of date	B	3.33	10

D

D-coded items	5	5.3.7.5	16
DA Form 2028s	B	5.3.2.4	73
DA Form 2028s	B	5.4.4	89
Data plates	2	5.2.3.3.6.2	8
Date			
Change	B	5.3.1.1.7	57
Current as of	B	3.33	10
TM	B	5.4.1.4.6	76
TM	B	5.3.1.1.6	57
Decals and instruction data plates	2	5.2.3.3.6.2	8
Decontamination procedures, NBC	2	5.2.3.4.4	8
Definition list	B	4.9.10.7a	44
Definition list	B	4.8.13.8a	29

INDEX

	PART	PARAGRAPH	PAGE
Definitions	4	5.3.4.22.2	41
DEFINITIONS	B	3.0	5
Degradation	B	3.34	10
Deleted figures and items on RPSTLs	B	4.10.1.6a	53
Department of Defense	B	3.35	10
Department of Defense Ammunition Code	B	3.36	10
Depot mobilization requirements WP	4	5.3.4.21	40
Depot maintenance work requirements	4	4.4	1
Depot maintenance work requirements	3	4.4	1
Depot Maintenance Work Requirement	B	3.39	10
Depot repair parts	5	5.3.3.1	5
Depot-level maintenance	B	3.38	10
Description information, preparation of	1	5.1	2
Description & use of controls/indicators WP	2	5.2.3.2	4
Description and usable on code column	5	5.3.6.8	13
Descriptive information	B	4.8.10	27
Descriptive work packages, required	1	5.1.2	3
Destruction to prevent enemy use	B	5.4.1.7.8	79
Destruction to prevent enemy use	B	5.3.1.9.7	62
Destruction notice	B	5.3.1.1.5	57
Destruction notice	B	5.4.1.4.5	76
Development of operational checkout WP	3	5.3.4.6.2	11
Development of troubleshooting procedures	3	4.2	1
Development of maintenance procedures	4	4.2	1
Deviations and exceptions	B	5.4.1.7.20	82
Deviations and exceptions	B	5.3.1.9.19	65
Diagrams	B	4.8.27.2.5	36
Diagrams	B	4.9.24.2.5	49
Area	4	5.3.4.12.2	34
Block	B	3.16	9
Functional	B	3.60	12
Inspection Area	4	5.3.4.11.1	31
Logic tree	B	3.85	14
Portraying signal flow	B	4.9.24.4.4	51
Portraying signal flow	B	4.8.27.4.8	39
Referencing items on	B	4.8.23.18	34
Referencing items on	B	4.9.20.13	47
Schematic	B	3.134	17
Specifications for	B	4.8.27.2.5.1	36
Specifications for	B	4.9.24.2.5.1	49
Types of	B	4.8.27.2.5.2	37
Types of	B	4.9.24.2.5.2	50
Wiring	B	3.158	19
Wiring, work package	4	5.3.4.23	42
Differences between models	1	5.2.3	4

INDEX

	PART	PARAGRAPH	PAGE
Digital data			
Preparation for delivery	B	4.4	20
Preparation for delivery	1	4.3	1
Preparation for delivery	2	4.3	1
Preparation for delivery	3	4.5	2
Preparation for delivery	4	4.5	1
Preparation for delivery	5	4.2	1
Preparation for delivery	6	4.3	1
Digital graphics form	B	3.40	10
Digital photographs	B	4.9.24.2.3	48
Direct support maintenance	B	3.41	11
Disassemble	B	3.42	11
Disassembly	4	5.3.4.9.1.7	23
Disclosure notice	B	5.3.1.1.3	57
Disclosure notice	B	5.4.1.4.3	76
Distribution statement	B	5.3.1.1.4	57
Distribution statement	B	5.4.1.4.4	76
DMWR figure numbers	B	4.8.27.4.2	38
DMWR, RPSTL WPs included in	5	5.3.3	4
Document instance	B	3.43	11
Document type definition	B	3.44	11
DODISS	B	3.37	10
DODISS issue	B	6.2	90
Drawings required	4	5.3.3h	6
Drawings required	3	5.3.3h	8
Drawings required	2	5.2.3.3.1h	5
DTDs, Frame-based	1	4.4.1	1
DTDs, Frame-based	2	4.4.1	1
DTDs, Frame-based	3	4.6.1	2
DTDs, Frame-based	4	4.6.1	2
DTDs, Frame-based	5	4.3.1	1
DTDs, Frame-based	6	4.4.1	1
DTDs, Frame-based TMs	1	4.4.2	1
DTDs, Frame-based TMs	2	4.4.2	1
DTDs, Frame-based TMs	3	4.6.2	2
DTDs, Frame-based TMs	4	4.6.2	2
DTDs, Frame-based TMs	5	4.3.2	2
DTDs, Frame-based TMs	6	4.4.2	2
DTDs/FOSIs, obtaining	B	4.6	20
DTDs/FOSIs, use of	B	4.5	20
DTDs/FOSIs, use of	1	4.4	1
DTDs/FOSIs, use of	2	4.4	1
DTDs/FOSIs, use of	3	4.6	2
DTDs/FOSIs, use of	4	4.6	2
DTDs/FOSIs, use of	5	4.3	1
DTDs/FOSIs, use of	6	4.4	1

INDEX

	PART	PARAGRAPH	PAGE
E			
Effectivity notice	1	5.1.1d	2
Effectivity notice	2	5.2.2d	3
Effectivity notice	3	5.3.2d	6
Effectivity notice	4	5.3.2d	4
Electronic countermeasures	B	3.45	11
Electronic countermeasures	2	5.2.3.4.5	9
Electronic manual number	B	3.46	11
Electrostatic discharge	B	3.47	11
Electrostatic discharge marking	B	4.8.20	31
Electrostatic discharge marking	B	4.9.17	46
Electrostatic discharge sensitive parts	2	4.9	2
Electrostatic discharge sensitive parts	3	4.11	2
Electrostatic discharge sensitive parts	4	4.11	2
Emergency page markings	B	4.8.22.4	32
Emergency procedures	2	5.2.3.4.6	9
End item code	B	3.48	11
End item nomenclature	1	5.1.1b	2
End item nomenclature	2	5.2.2b	3
End item nomenclature	3	5.3.2b	6
End item nomenclature	4	5.3.2b	4
End of figure statement	5	5.3.6.8i	15
Engineering change proposal	B	5.4.1.7.19	82
Engineering change proposals	B	5.3.1.9.18	65
Engineering drawings	B	4.8.27.2.4	36
Engineering drawings	B	4.9.24.2.4	49
Environment/weather, unusual	2	5.2.3.4.2	8
Equations	B	4.8.24	34
Equations	B	4.9.21	47
Equipment Data	1	5.2.4	4
Equipment	B	3.49	11
Equipment characteristics, capabilities	1	5.2.1	3
Equipment components	4	5.3.4.1.3b(2)	8
Equipment conditions	2	5.2.3.3.1f	5
Equipment conditions	3	5.3.3f	8
Equipment conditions	4	5.3.3f	5
Equipment configuration	1	5.2.5	5
Equipment description and data	3	5.3.4.5a	11
Equipment description and data WP	1	5.2	3
Equipment Improvement recommendation	B	3.50	11
Equipment Improvement Recommendations	B	5.4.1.7.4	78
Equipment Improvement Recommendations	B	5.3.1.9.3	62
Equipment nomenclature	B	3.51	11
Equipment not ready/available if	4	5.3.4.3.2.1.1f	16
Equipment/user fitting instructions WP	4	5.3.4.2	12
Essential	B	3.52	11
Estimated time to complete task	2	5.2.3.3.1i	5
Estimated time to complete task	3	5.3.3i	8
Estimated time to complete task	4	5.3.3i	6
Examples of required WPs	1	5.1.3	3
Expendable items	B	3.54	11

SUPERSEDES PAGE 181 OF MIL-STD-40051A

INDEX

	PART	PARAGRAPH	PAGE
Expendable and durable items list	6	5.7.2	17
Expendable and durable items in RPSTLs	5	5.3.6.11	15
Expendable and durable items list WP	6	5.7	16
External connections	4	5.3.4.1.8a	11
External inspection	3	5.3.4.3.1d	9
External power	4	5.3.4.9.1.4	23

F

Facilities work package	4	5.3.4.8	19
Fault code reference index	3	5.3.4.6.3d(3)	12
Fault reporting/isolation	3	5.1.2.1	4
Figure numbers	B	4.9.24.4.1	51
Figure numbers	B	4.8.27.4.1	38
Figure titles	B	4.9.24.4.2	51
Figure titles	B	4.8.27.4.6	39
Figure titles, RPSTLs	5	5.3.6.2	13
Figures (See Graphics)			
Final painting, refinishing, & marking	4	5.3.4.9.1.22	28
Final records check	4	5.3.4.11.4	33
Final reproducible copy	B	4.8.6	23
Final Reproducible Copy	B	3.55	12
Final test procedure	4	5.3.4.9.1.22	28
First article inspection	4	5.3.4.22.7	42
Flight safety critical aircraft parts	B	5.3.1.9.21	65
Flight safety critical aircraft parts	B	5.4.1.7.22	82
Flight safety critical aircraft parts`	6	5.10.2	19
Flight safety hazard	B	3.56	12
Flyable storage	4	5.3.4.19.2	39
Foldout figure numbers	B	4.8.27.4.4	39
Foldout pages	B	4.8.5	23
Foldout pages	B	5.3.2.3	73
Font size and style	B	4.9.3	41
Footer	B	3.57	12
Footers	B	4.8.16.2	30
Footnotes			
Referencing	B	4.8.23.15	34
To tables	B	4.8.13.6	28
To tables	B	4.9.10.6	44
Fording and swimming	2	5.2.3.4.3	8
Foreign ammunition work package	4	5.3.4.17	38
Format	B	4.7	20
Abbreviations & Acronyms	B	4.8.17	30
Chapters	B	4.8.2.2	21
Chapters	B	4.8.8	25
Descriptive information	B	4.8.10	27
Examples of	B	4.8.1	21
Foldout pages	B	4.8.5	23
FRC	B	4.8.6	23
IETMs	B	4.9	39
Illustrations	B	4.8.15	29
MAC	6	5.3.3.2	13

INDEX

	PART	PARAGRAPH	PAGE
Format (Continued)			
Maintenance tasks	B	4.8.10	27
Margin data	B	4.8.16	29
Page size and orientation	B	4.8.4	23
Paragraphs	B	4.8.11	27
Procedural steps	B	4.8.12	27
Protective/security markings	B	4.8.22	32
Symbols	B	4.8.18	31
Tables	B	4.9.10.4	44
Tables	B	4.8.13.4	27
Tables	B	4.8.13	27
Text	B	4.8.14	29
TM division	B	4.8.2	21
Type size	B	4.8.3	23
Volume size and content	B	4.8.2.1	21
Warnings, Cautions, & Notes	B	4.8.7	24
Work packages	B	4.8.9	25
Work packages	B	4.8.2.3	21
FOSI	B	3.58	12
Obtaining	B	4.6	20
Use of	B	4.5	20
Frame-based manuals - Style and format	B	4.9	39
Frame-based technical manual	B	3.59	12
Frame-based TMs, DTDs	1	4.4.2	1
Frame-based TMs, DTDs	2	4.4.2	1
Frame-based TMs, DTDs	3	4.6.2	2
Frame-based TMs, DTDs	4	4.6.2	2
Frame-based TMs, DTDs	5	4.3.2	2
Frame-based TMs, DTDs	6	4.4.2	2
Frame-based TMs, use of DTDs/FOSIs for	B	4.5.2	20
Front cover	B	5.3.1.1	56
Front matter	B	4.8.16.2.1.1	30
Changed	B	4.10.1.3	52
Defined	B	5.3.1	55
Preparation of	B	5.3	55
Functional diagram	B	3.60	12
Functional Group Code	B	3.61	12
Functional grouping	5	5.3.7.1	15

G

General information	B	5.4.1.8.2	83
General information	B	5.3.1.10.2	67
General information and introduction	4	5.3.4.4.1	17
General information, storage of aircraft	4	5.3.4.19.1	39
General information, weighing & loading	4	5.3.4.20.1	40
General information work package - IETMs	B	5.4.1.7	77
General information work package	B	5.3.1.9	61
General information work package - PMCs	B	5.4.1.9	85
General information work package - PMCs	B	5.3.1.11	68
General Information Work Package - PMS	B	5.3.1.10	67
General Information Work Package - PMS	B	5.4.1.8	83

INDEX

	PART	PARAGRAPH	PAGE
General maintenance work packages	4	5.3.4.10	31
General procedures and precautions	3	5.3.4.6.3b	12
General procedures and precautions	3	5.3.4.6.5b	14
General procedures and precautions	3	5.3.4.6.4b	13
General support maintenance	B	3.62	12
Glossary	B	5.3.2.1	73
Government documents	B	2.2	1
Grade Level	B	3.63	12
Graphics	B	3.64	12
Graphics	B	4.9.24	48
Graphics	B	4.8.27	35
Border rules and boxes	B	4.9.24.3.1	50
Border rules and boxes	B	4.8.27.3.1	37
Callout	B	3.20	9
Callouts	B	4.9.24.3.4	50
Callouts	B	4.8.27.3.4	38
CALS raster	B	3.21	9
CGM	B	3.30	10
Change symbols	B	4.10.1.5	53
Charts and graphs	B	4.8.27.2.6	37
Diagrams	B	4.8.27.2.5	36
Diagrams	B	4.9.24.2.5	49
Digital photographs	B	4.9.24.2.3	49
Digital graphics form	B	3.40	10
Display of	B	4.9.12	45
Elements of	B	4.8.27.3	36
Elements of	B	4.9.24.3	51
Engineering drawings	B	4.9.24.2.4	49
Engineering drawings	B	4.8.27.2.4	36
Figure titles for RPSTLs	5	5.3.6.2	13
Format	B	4.8.27.1	35
Format	B	4.9.24.1	48
Human figure, use of	B	4.8.27.3.2	37
Human figure, use of	B	4.9.24.3.2	50
IGES	B	3.73	13
Illustration	B	3.72	13
Legend	B	3.81	14
Legends	B	4.8.27.3.6	38
Legends	B	4.9.24.3.6	51
Line drawings	B	4.8.27.2.1	36
Line drawings	B	4.9.24.2.1	49
Multiview drawings	B	4.9.24.2.2	49
Multiview/Multisheet drawings	B	4.8.27.2.2	36
Numbers and titles	B	4.8.27.4	38
Numbers and titles	B	4.9.24.4	51
Part information	5	5.2.1.1i	4
Photographs	B	4.8.27.2.3	36
Pictorial	B	3.111	16
Placement in pocket TMs	B	4.8.15.2	29
Placement of	B	4.8.15	29
Pre-screening	B	3.113	16
Referencing	B	4.8.23.16	34

INDEX

	PART	PARAGRAPH	PAGE
Graphics (Continued)			
Referencing	B	4.9.20.11	48
Referencing index numbers	B	4.8.23.17	34
Referencing index numbers	B	4.9.20.12	47
Repeating	B	4.8.15.3	29
Revision symbols	B	4.10.3.2	54
Rotating illustrations	B	4.8.15.1	29
RPSTL illustrations	5	5.3.9	16
Tools and Test equipment	B	4.8.27.2.7	37
Tools and Test equipment	B	4.9.24.2.6	50
Types of	B	4.8.27.2	35
Types of	B	4.9.24.2	48
Use of color in	B	4.8.27.4.9	39
Use of color in	B	4.9.24.4.5	51
Ground handling	4	5.3.4.9.1.4	23

H

Handbooks	B	2.2.1	1
Handling	4	5.3.4.9.1.27	30
Handling	4	5.3.4.1.11	12
Hand receipt manuals	B	5.4.1.7.5	79
Hand receipt manuals	B	5.3.1.9.4	62
Hardness critical item	B	3.65	12
Hardness critical process	B	3.66	12
Hardness critical process marking	B	4.9.16	45
Hardness critical process marking	B	4.8.19	31
Hardtime scheduled maintenance	B	3.67	13
Hazardous materials warnings, format for	B	4.8.7.2.3.1	25
Hazardous materials warnings	B	4.9.5.2	42
Hazardous materials warnings	B	4.8.7.2.3	24
Header	B	3.68	13
Headers	B	4.8.16.1	29
Hoisting	4	5.3.4.9.1.4	23
Horizontal format	B	3.69	13
How-to-use-this-IETM information	B	5.4.1.6	77
How to use this manual information	B	4.8.16.2.1.1e	30
How-to-use-this-manual information	B	5.3.1.7	60
Human figure, use of	B	4.9.24.3.2	50
Human figure, use of	B	4.8.27.3.2	37

I

Icon	B	3.70	13
Icons	B	4.8.7.2	24
Development of	B	4.8.7.2.1	24
Hazardous materials warnings with	B	4.8.7.2.3	24
Safety warnings with	B	4.8.7.2.2	24
Identical assemblies	5	5.3.9.4	17
Identical parts/item numbers	5	5.3.9.3	17
Identification information frame	B	5.4.1.4	75

INDEX

	PART	PARAGRAPH	PAGE
IEEE	B	3.75	13
IETMs	B	3.76	13
Alerts, use of	B	4.9.4	41
Divisions	B	4.9.2	40
DTDs for	1	4.4.2	1
DTDs for	2	4.4.2	1
DTDs for	3	4.6.2	2
DTDs for	4	4.6.2	2
DTDs for	5	4.3.2	2
DTDs for	6	4.4.2	2
Font size	B	4.9.3	41
Frame-based manual	B	3.59	12
General Info WP - PMC	B	5.4.1.9	85
General Information WP - PMS	B	5.4.1.8	83
General Information WP	B	5.4.1.7	77
Identification information (cover)	B	5.4.1.4	75
Installation data	B	5.4.1.1	74
Introductory matter	B	5.4	74
Parts information for	5	5.2.1	2
Security markings	B	4.9.19	46
Style and format	B	4.9	39
Tailoring guidance	B	A.5.1.2	116
Technical content tables	B	A.5.1.2.2	117
Warnings, cautions, & notes	B	4.9.5	41
IGES	B	3.73	13
Illustrated list of manufactured items WP	4	5.3.4.14	36
Illustrated loading plan	2	5.2.3.6.2	9
Illustration	5	5.2.1.1i	4
Illustration	B	3.72	13
Illustration identification numbers	B	4.9.24.4.3	51
Illustration identification numbers	B	4.8.27.4.7	39
Illustrations (See Graphics)			
Of manufactured items	4	5.3.4.14.3	37
Placement of	B	4.8.15	29
Inclusion of parts information in WPs	5	5.2.1.2	4
Indentions	5	5.3.6.8c	13
Index	B	5.3.2.2	73
Index	B	5.4.3	89
Index numbers	B	4.8.27.3.4.1	38
Index numbers	B	4.9.24.3.4.1	51
Index numbers, referencing	B	4.9.20.12	47
Index numbers, referencing	B	4.8.23.17	34
Index of manufactured items	4	5.3.4.14.2	37
Initial adjustments before use	2	5.2.3.3.5	6
Initial distribution number	B	3.71	13
Initial Graphics Exchange Specification	B	3.73	13
Initial setup information	B	4.9.6.1	42
Initial setup information	2	5.2.3.3.1	4
Initial setup information	3	5.3.3	7
Initial setup information	4	5.3.3	4
In-process inspections	4	5.3.4.22.5	42
Inspect	B	3.74	13

INDEX

	PART	PARAGRAPH	PAGE
Inspection	4	5.3.4.9.1.22	28
Inspection	4	5.3.4.9.1.16	26
Inspection area diagrams	4	5.3.4.11.1	31
Inspection of radioactive Ammunition	4	5.3.4.9.1.16.1	26
Inspection of installed items	4	5.3.4.9.1.5	23
Inspection/acceptance & rejection criteria	4	5.3.4.9.1.9	24
Install	B	3.128	17
Installation	4	5.3.4.9.1.17	27
Installation data, IETMs	B	5.4.1.1	74
Installation instructions	4	5.3.4.1.4	8
Installation of the equipment	4	5.3.4.1.4.2	9
Instruction data plates	2	5.2.3.3.6.2	8
Integrated system troubleshooting WP	3	5.3.4.6.6	15
Integrated system troubleshooting	3	5.1.2.2	4
Integrated systems requiring common test	3	5.1.2.2.3	5
Integrated systems requiring peculiar test	3	5.1.2.2.2	4
Integrated systems w/self-test or built in	3	5.1.2.2.1	4
Intended use	B	6.1	90
Intended use, Appendix A	B	A.5.2	115
Interchangeability	B	3.78	13
Interim NBC decontamination procedures	2	5.2.3.4.4	8
Internal control settings	4	5.3.4.1.8b	12
International standardization agreements	B	5.3.1.7.1	60
Intervals	4	5.3.4.3.2.1.1b	15
Introduction	2	5.2.3.6.1	9
AAL	6	5.6.1	15
Aircraft Inventory Guide	4	5.3.4.18.1	38
Aviation MAC	6	5.3.2	6
COEI/BII	6	5.5.1	14
Combined operational checkout	3	5.3.4.6.5a	14
Component checklist	3	5.3.4.4.1	10
Depot mobilization WP	4	5.3.4.21.1	41
Expendable/durable items WP	6	5.7.1	16
Manufactured items WP	4	5.3.4.14.1	36
Operational checkout WP	3	5.3.4.6.3a	12
PMCS	4	5.3.4.3.1	12
PMI WP	4	5.3.4.4.1	17
RPSTL	5	5.3.5	5
Standard MAC	6	5.3.1	3
Tool ID list	6	5.8.1	17
Troubleshooting	3	5.3.4.6.4a	13
Wiring diagrams WP	4	5.3.4.23.1	42
Introduction work package	B	5.3.1.8	61
Introductory information preparation	B	5.2	55
Introductory matter - Framed-based TMs	B	5.4	74
Introductory matter	B	5.4.1	74
Inventoriable items	4	5.3.4.18.3	38
ISO	B	3.77	13
Item number column	5	5.3.6.3	13
Item numbers	4	5.3.4.3.2.1.1a	14
Items to be checked or serviced	4	5.3.4.3.2.1.1d	15

INDEX

	PART	PARAGRAPH	PAGE
J			
Jacking	4	5.3.4.9.1.4	23
Jamming	2	5.2.3.4.5	9
Joint use	1	5.1.1f	3
Joint use	2	5.2.2f	3
Joint use	3	5.3.2f	7
Joint use	4	5.3.2f	4
Joint service TMs, number for	B	5.3.1.1.1	57
Joint service TMs, number for	B	5.4.1.4.1	76
K			
Keyword listing	B	6.4	90
Kits	5	5.3.6.8h	14
Kits	5	5.3.8.5	16
L			
Landscape format	B	3.69	13
Landscape mode	B	3.79	13
Leader lines	B	4.9.24.3.5	51
Leader lines	B	4.8.27.3.5	38
Leak rate	B	3.80	14
Legend	B	3.81	14
Legends	B	4.9.24.3.6	51
Legends	B	4.8.27.3.6	38
Limited repair	B	3.82	14
Line drawings	B	4.9.24.2.1	49
Line drawings	B	4.8.27.2.1	36
Line replaceable unit	B	3.83	14
List of abbreviations/acronyms	B	5.3.1.9.11	63
List of abbreviations	B	5.4.1.7.12	80
List of Applicable Publications	B	3.84	14
List of contents	B	5.4.1.5	76
List of effective pages/WPs	B	4.8.16.2.1.1d	30
List of effective pages/WPs	B	5.3.1.4	58
List			
AAL	6	5.6.2	16
BII	6	5.5.2.2	15
COEI	6	5.5.2.1	15
Expendable and durable items	6	5.7.2	17
Tool ID	6	5.8.2	18
Lists	B	4.8.13.8	28
Lists	B	4.9.10.7	44
Lists	B	4.9.10	43
Lists	B	4.8.13	27
Loading information	4	5.3.4.20.3	40
Location and description of major parts	1	5.2.2	4
Logic tree	B	3.85	14
Logistics Support Analysis	B	3.86	14
LSAR	B	5.1a	55
Lubrication	4	5.3.4.9.1.22	28

INDEX

	PART	PARAGRAPH	PAGE
Lubrication	4	5.3.4.9.1.14	25
Lubrication charts	4	5.3.4.5.2	18
Lubrication instructions	4	5.3.4.5.1	18
Lubrication instructions, aircraft	4	5.3.4.5	18

M

MAC	B	5.1b	55
Aviation MAC introduction	6	5.3.2	6
Entries	6	5.3.3.1	12
Format	6	5.3.3.2	13
Remarks	6	5.3.3.4	13
Standard introduction	6	5.3.1	3
Tools and test equipment	6	5.3.3.3	13
Work package	6	5.3.3	12
Maintainability	B	3.126	17
Maintenance			
Aircraft lubrication	4	5.3.4.5	18
Aircraft inventory guide	4	5.3.4.18	38
Ammunition Maintenance WP	4	5.3.4.6	19
Ammunition marking info WP	4	5.3.4.16	37
Ammunition markings	4	5.3.4.1.9	12
Ammunition activation	4	5.3.4.1.12	12
Assembly of equipment	4	5.3.4.1.4.1	9
Auxiliary equipment WP	4	5.3.4.7	19
AVIM	B	3.12	8
AVUM	B	3.13	8
Circuit alignment	4	5.3.4.1.8	11
Classification of defects	4	5.3.4.1.10	12
Depot mobilization rqmts WP	4	5.3.4.21	40
Depot-level	B	3.38	10
DS	B	3.41	11
Facilities	4	5.3.4.8	19
Foreign ammunition	4	5.3.4.17	38
General	4	5.3.4.10	31
GS	B	3.62	12
Handling	4	5.3.4.1.11	12
Installation instructions	4	5.3.4.1.4	8
Installation of the equipment	4	5.3.4.1.4.2	9
MAC	6	5.3	3
Manufactured items WP	4	5.3.4.14	36
MTBCM	B	3.91	14
MTBF	B	3.92	14
MTTR	B	3.90	14
Next higher assembly	B	3.98	15
OIP Work package	4	5.3.4.13	36
OIP	B	3.107	15
On-condition	B	3.102	15
Operator	B	3.103	15
Phased maintenance	4	5.3.4.11	31
Phased maintenance	B	3.110	16
PMCS	B	3.119	16

INDEX

	PART	PARAGRAPH	PAGE
Maintenance (Continued)			
PMCS	4	5.3.4.3	12
PMI work package	4	5.3.4.4	17
PMS work package	4	5.3.4.12	33
Preliminary calibration	4	5.3.4.1.7	11
Preliminary checks & adjusts	4	5.3.4.1.6	10
Preliminary servicing	4	5.3.4.1.5	10
Preshop analysis	B	3.114	16
Preventive	B	3.115	16
Procedures, development of	4	4.2	1
QA requirements WP	4	5.3.4.22	41
RAM	B	3.126	17
Reliability centered	B	3.127	17
Scheduled, hardtime	B	3.67	13
Service upon receipt	4	5.3.4.1.3	7
Shelter requirements	4	5.3.4.1.2	7
Siting	4	5.3.4.1.1	6
Special applications	4	5.3.4.1.4.3	10
Storage of aircraft WP	4	5.3.4.19	39
Subassembly	B	3.143	18
Task	B	3.148	19
TBO items	B	3.152	19
Torque limits WP	4	5.3.4.15	37
Types of	4	5.2	3
Unit	B	3.155	19
Van and shelter installations	4	5.3.4.1.4.4	10
Wiring diagrams WP	4	5.3.4.23	42
Work packages	4	5.3	3
Maintenance activities	B	5.3.1.10.1	67
Maintenance activities	B	5.4.1.8.1	83
Maintenance allocation chart WP	6	5.3	3
Maintenance allocation chart	B	3.87	14
Maintenance forms, records, and reports	B	5.3.1.9.2	61
Maintenance forms, records, & reports	B	5.4.1.7.3	78
Maintenance instructions, preparation of	4	5.1	3
Maintenance level	B	3.88	14
Maintenance level applicability	1	4.2	1
Maintenance level applicability	2	4.2	1
Maintenance level applicability	3	4.3	1
Maintenance level applicability	4	4.3	1
Maintenance level applicability	6	4.2	1
Maintenance levels	1	5.1.1a	2
Maintenance levels	2	5.2.2a	3
Maintenance levels	3	5.3.2a	6
Maintenance levels	4	5.3.2a	4
Maintenance task	B	3.89	14
Maintenance tasks	4	5.3.4.9.1	20

INDEX

	PART	PARAGRAPH	PAGE
Maintenance tasks	B	4.8.10	27
Adjust	B	3.4	8
Adjustment	4	5.3.4.9.1.18	27
Align	B	3.5	8
Alignment	4	5.3.4.9.1.12	25
Ammunition Activation	4	5.3.4.9.1.29	31
Ammunition marking	4	5.3.4.9.1.28	31
And descriptive info	B	4.9.7	43
Assembly	B	3.10	8
Assembly/Prep for use	4	5.3.4.9.1.2	22
Assembly	4	5.3.4.9.1.15	25
Calibrate	B	3.19	9
Calibration	4	5.3.4.9.1.19	27
Classification, defects	4	5.3.4.9.1.26	30
Cleaning	4	5.3.4.9.1.8	24
Disassemble	B	3.42	11
Disassembly	4	5.3.4.9.1.7	23
Ground handling	4	5.3.4.9.1.4	23
Handling	4	5.3.4.9.1.27	30
Inspect	B	3.74	13
Inspect/installed items	4	5.3.4.9.1.5	23
Inspection	4	5.3.4.9.1.16	26
Inspection criteria	4	5.3.4.9.1.9	24
Install	B	3.128	17
Installation	4	5.3.4.9.1.17	27
Lubrication	4	5.3.4.9.1.14	25
Marking	4	5.3.4.9.1.23	29
NDTI	B	3.100	15
Non destructive testing	4	5.3.4.9.1.10	24
Overhaul & retirement	4	5.3.4.9.1.24	29
Overhaul	B	3.106	15
Packaging	4	5.3.4.9.1.23	29
Painting	4	5.3.4.9.1.13	25
Placing in service	4	5.3.4.9.1.21	28
Preembarkation inspect	4	5.3.4.9.1.16.2	27
Prep fop storage/ship	4	5.3.4.9.1.25	30
Preservation	4	5.3.4.9.1.23	29
Radio suppression	4	5.3.4.9.1.20	28
Radioactive Ammunition	4	5.3.4.9.1.16.1	26
Rebuild	B	3.124	17
Referencing	B	4.8.23.13	33
Removal	4	5.3.4.9.1.6	23
Remove	B	3.128	17
Repair, limited	B	3.82	14
Repair	4	5.3.4.9.1.11	25
Repair	B	3.129	17
Repair, complete	B	3.25	9
Replace	B	3.132	17
Replacement	4	5.3.4.9.1.11	25
Requirements	4	5.3.4.9.1.1	21

INDEX

	PART	PARAGRAPH	PAGE
Maintenance tasks (Continued)			
Service	B	3.135	18
Servicing	4	5.3.4.9.1.3	22
Test	B	3.150	19
Test and inspection	4	5.3.4.9.1.16	26
Testing	4	5.3.4.9.1.22	28
Maintenance test flight form & rotor record	4	5.3.4.11.3	32
Maintenance work packages	4	5.3.4.9	19
Maintenance work packages, types of	4	5.3.4	6
Malfunction/symptom index	3	5.3.4.2.1	8
Man-hours	4	5.3.4.3.2.1.1c	15
Mandatory replacement parts	4	5.3.4.3.2.2	17
Mandatory replacement parts WP	6	5.9	18
Mandatory safety-of-flight inspection items	4	5.3.4.12.1	34
Manual sizes	B	Table I	23
Manual troubleshooting	3	5.1.1.1	3
Manufactured items	5	5.3.6.8g	14
Manufactured items, illustrations of	4	5.3.4.14.3	37
Manufactured items, index of	4	5.3.4.14.2	37
Margin data	B	4.8.16	29
Marking			
COMSEC	B	4.8.22.6	32
Electrostatic discharge	B	4.8.20	31
Electrostatic discharge	B	4.9.17	46
Emergency	B	4.9.19	46
Emergency	B	4.8.22.4	32
Nuclear Hardness	B	4.9.16	45
Nuclear hardness	B	4.8.19	31
Protective	B	4.9.19	46
Protective	B	4.8.22.5	32
QA information	B	4.9.18	46
QA information	B	4.8.21	32
Security classification	B	4.8.22.1	32
Security classification	B	4.9.19	46
Materials/parts	2	5.2.3.3.1c	4
Materials/parts	3	5.3.3c	7
Materials/parts	4	5.3.3c	5
Matrixes			
10 manual	B	Table A.1	119
12/12&P manual	B	Table A.1	119
13/13&P manual	B	Table A.1	119
14/14&P manual	B	Table A.1	119
20/20&P manual	B	Table A.2	127
23/23&P manual	B	Table A.3	133
24/24&P manual	B	Table A.3	133
30/30&P manual	B	Table A.2	127
34/34&P manual	B	Table A.3	133
40/40&P manual	B	Table A.2	127
Aircraft PMS	B	Table A.8	154
Aircraft troubleshooting manual	B	Table A.7	153
Aircraft PM	B	Table A.9	155
AVIM (-30/30&P) manual	B	Table A.4	139

INDEX

	PART	PARAGRAPH	PAGE
Matrixes (Continued)			
AVUM (-20/20&P) manual	B	Table A.4	139
AVUM & AVIM (-23/23&P) manual	B	Table A.4	139
DMWR IETM	B	Table A.12	169
DMWR	B	Table A.6	147
Maintenance IETM (All but Depot)	B	Table A.11	163
Operator IETM	B	Table A.10	157
RPSTL manual	B	Table A.5	145
Maximum time to repair	B	3.90	14
Meantime between corrective maintenance	B	3.91	14
Meantime between failures	B	3.92	14
Methods of testing and troubleshooting	3	5.1.1	3
Method A - Test logic	3	5.3.4.6.4c(1)	13
Method B - Text	3	5.3.4.6.4c(2)	13
Method C - Multiplex read codes method	3	5.3.4.6.4c(3)	13
Metric symbols	B	4.8.18.2	31
Metric symbols	B	4.9.15.2	45
Military terms	B	4.9.22.3	48
Military terms	B	4.8.25.3	35
Mobilization requirements	4	5.3.4.21.2	41
Mobilization requirements	B	5.3.1.9.20	65
Mobilization requirements	B	5.4.1.7.21	82
Modification Work Orders	B	5.4.1.7.19.1	82
Modification Work Orders	B	3.94	14
Modification Work Orders	B	5.3.1.9.18.1	65
Modified table of organization & equipment	B	3.93	14
Module	B	3.95	15
Mooring	4	5.3.4.9.1.4	23
Multimedia presentation	B	4.9.23	48
Multiplex read codes method	3	5.3.4.6.4c(3)	13
Multisheet figure numbers	B	4.8.27.4.5	39
Multiview/Multisheet drawings	B	4.8.27.2.2	36
Multiview drawings	B	4.9.24.2.2	49

N

Narrative procedures	3	5.3.4.3.1g(1)	10
National Item Identification Number	B	3.96	15
National stock number	B	3.97	15
National stock number	5	5.2.1.1d	3
Next higher assembly	B	3.98	15
Next higher assembly	5	5.2.1.1e	3
Nomenclature	B	3.99	15
Nomenclature	B	4.8.25	35
Nomenclature	B	4.9.22	47
Automatic test equip terms	B	4.8.25.4	35
Automatic test equip terms	B	4.9.22.4	48
Consistency & applicability	B	4.9.22.1	47
Consistency & applicability	B	4.8.25.1	35
End item	4	5.3.2b	4
End item	1	5.1.1b	2

INDEX

	PART	PARAGRAPH	PAGE
Nomenclature (Continued)			
End item	2	5.2.2b	3
End item	3	5.3.2b	6
Equipment	B	3.51	11
Military terms	B	4.8.25.3	35
Military terms	B	4.9.22.3	48
Official/approved	B	4.8.25.2	35
Official/approved	B	4.9.22.2	48
Nomenclature cross-reference list	B	5.3.1.9.10	63
Nomenclature cross-reference list	B	5.4.1.7.11	80
Non-Government publications	B	2.3	4
Nonconsecutive item numbers	5	5.3.6.4	13
Nondestructive testing inspection	B	3.100	15
Nondestructive testing inspection	4	5.3.4.9.1.10	24
Notes	B	4.9.5	41
Notes	B	4.8.7	24
Display requirements for	B	4.9.5.1.1	41
Use and placement of	B	4.8.7.1	24
Use and placement of	B	4.9.5.1	41
NSN column	5	5.3.6.6	13
NSN index work package	5	5.3.8.1	16
Nuclear, Biological, and Chemical	B	3.101	15
Nuclear hardness	B	5.3.1.9.15	64
Nuclear hardness	B	5.4.1.7.16	81
Nuclear hardness	2	4.10	2
Nuclear hardness	3	4.12	2
Nuclear hardness	4	4.12	2
Nuclear hardness marking	B	4.9.16	45
Nuclear hardness marking	B	4.8.19	31
Number			
Electronic manual	B	3.46	11
Illustration identification	B	4.9.24.4.3	51
Illustration identification	B	4.8.27.4.7	39
Initial distribution	B	3.71	13
Joint service TMs	B	5.4.1.4.1	76
Joint Service TMs	B	5.3.1.1.1	57
NIIN	B	3.96	15
NSN	B	3.97	15
Part	B	3.109	15
Publication identification	B	3.121	16
WP Identification	B	4.9.6.2	42
WP Identification	B	4.8.9.4	26
Numbering			
Chapters	B	4.8.8.2	25
DMWR figures	B	4.8.27.4.2	38
Figures	B	4.8.27.4.1	38
Figures	B	4.9.24.4.1	51
Foldout figures	B	4.8.27.4.4	39
Multisheet figures	B	4.8.27.4.5	39
Pages	B	4.8.16.2.1	30
Paragraphs	B	4.9.8.1	43
Paragraphs	B	4.8.11.1	27

INDEX

	PART	PARAGRAPH	PAGE
Numbering (Continued)			
Procedural steps	B	4.9.9.1	43
RPSTL figures	B	4.8.27.4.3	39
Tables	B	4.8.13.2	27
Tables	B	4.9.10.2	44
Work package pages	B	4.8.9.3	26
Work package sequential	B	4.8.9.2	25

O

Official/approved nomenclature	B	4.8.25.2	35
Official/approved nomenclature	B	4.9.22.2	48
On-condition maintenance	B	3.102	15
On-vehicle loading plan WP	2	5.2.3.6	9
Operating procedures	2	5.2.3.3.6	6
Operating procedure considerations	2	5.2.3.3.6.1	7
Operation under usual conditions WP	2	5.2.3.3	4
Operation under unusual conditions WP	2	5.2.3.4	8
Operational availability	B	3.126	17
Operational checkout procedures	3	5.3.4.6.3d	12
Operational checkout procedures	3	5.3.4.6.5d	14
Operational checkout work package	3	5.3.4.6.3	12
Operational checkout test procedure	3	5.3.4.6.3d(1)	12
Operational checkout/troubleshooting WP	3	5.3.4.6	11
Operator instructions WP	2	5.2	2
Operator instruction, preparation of	2	5.1	2
Operator instruction WPs, Types of	2	5.2.3	3
Operator maintenance	B	3.103	15
Order of precedence	B	2.4	5
Orphan	B	3.104	15
Other Government documents	B	2.2.2	3
Overall Grade Level	B	3.105	15
Overall security classification	B	4.8.22.2	32
Overhaul	B	3.106	15
Overhaul and retirement schedule	4	5.3.4.9.1.24	29
Overhaul inspection procedures WP	4	5.3.4.13	36
Overhaul inspection procedure	B	3.107	15
Ozone depleting substances	B	5.3.1.9.6	62
Ozone depleting substances	B	5.4.1.7.7	79

P

Packaging material	4	5.3.4.1.3b(1)	7
Packing	4	5.3.4.1.11b	12
Packing	4	5.3.4.9.1.27b	30
Page-based manuals, style and format of	B	4.8	21
Page-based technical manual	B	3.108	15
Page-based TMs - Complete revisions for	B	4.10.2	53
Page-based TMs, DTDs	4	4.6.1	2
Page-based TMs, DTDs	2	4.4.1	1
Page-based TMs, DTDs	3	4.6.1	2
Page-based TMs, DTDs	1	4.4.1	1
Page-based TMs, DTDs	5	4.3.1	1

INDEX

	PART	PARAGRAPH	PAGE
Page-based TMs, DTDs	6	4.4.1	1
Page-based TMs, use of DTDs/FOSIs for	B	4.5.1	20
Page			
Numbering	B	4.8.16.2.1	30
Orientation	B	4.8.4	23
Size	B	4.8.4	23
Painting	4	5.3.4.9.1.13	25
Paragraphs	B	4.8.11	27
Paragraphs	B	4.9.8	43
Numbering	B	4.9.8.1	43
Numbering	B	4.8.11.1	27
Subparagraph titles	B	4.8.11.2	27
Titles	B	4.9.8.2	43
Titles	B	4.8.11.2	27
Parking	4	5.3.4.9.1.4	23
Part/item name	5	5.2.1.1a	3
Part number	B	3.109	15
Part number	5	5.2.1.1b	3
Part number column	5	5.3.6.7	13
Part number, complete	B	3.24	9
Part number index work package	5	5.3.8.2	16
Parts information			
Additional	5	5.2.1.1h	3
BOI	B	3.15	9
Bulk items	B	3.18	9
CAGEC	B	3.22	9
Chapter	5	5.3.4	5
Complete part no	B	3.24	9
Cross-reference indexes	5	5.3.8	16
Database	5	5.2.1.1	3
Development of	5	5.2	2
IETMs	5	5.2.1	2
Illustration	5	5.2.1.1i	4
In work packages	B	4.9.2.1.2	40
Next higher assembly	5	5.2.1.1e	3
NSN	5	5.2.1.1d	3
Part number	B	3.109	15
Part number	5	5.2.1.1b	3
Part/item name	5	5.2.1.1a	3
Quantity	5	5.2.1.1g	3
Reference designation	5	5.2.1.1c	3
Repair parts list WP	5	5.3.6	13
RPSTL	B	3.131	17
SMR code	5	5.2.1.1f	3
SMR code	B	3.137	18
Special tools list WP	5	5.3.7	15
UOC	B	3.156	19
Patch panel connections	4	5.3.4.1.8b	12
Peculiar test sets, systems requiring	3	5.1.2.2.2	4
Periods of inventory	4	5.3.4.18.4	39
Personnel required	2	5.2.3.3.1d	5
Personnel required	3	5.3.3d	7
Personnel required	4	5.3.3d	5

INDEX

	PART	PARAGRAPH	PAGE
Phased maintenance checklist	4	5.3.4.11.2	31
Phased maintenance inspection	B	3.110	16
Phased maintenance inspection WP	4	5.3.4.11	31
Phased maintenance manual - Gen. Info WP	B	5.3.1.11	68
Phased maintenance manual - Gen Info WP	B	5.4.1.9	85
Photographs	B	4.8.27.2.3	36
Pictorial	B	3.111	16
Placing in service	4	5.3.4.9.1.21	28
PMCS	B	3.119	16
PMCS	4	5.3.4.3	12
Data preparation	4	5.3.4.3.2.1.1	14
Equipment not ready/available if	4	5.3.4.3.2.1.1f	16
Intervals	4	5.3.4.3.2.1.1b	15
Introduction	4	5.3.4.3.1	12
Item numbers	4	5.3.4.3.2.1.1a	14
Items to be checked or serviced	4	5.3.4.3.2.1.1d	15
Man-hours	4	5.3.4.3.2.1.1c	15
Mandatory replacement parts for	4	5.3.4.3.2.2	17
Procedures	4	5.3.4.3.2.1	14
Procedures	4	5.3.4.3.2.1.1e	15
PMCS work package	4	5.3.4.3.2	14
PMI warning data	B	5.3.1.2.1	58
PMS warning data	B	5.3.1.2.1	58
Pocket TM, placement of text and graphics	B	4.8.15.2	29
Portrait mode	B	3.112	16
Portraying signal flow	B	4.9.24.4.4	51
Portraying signal flow	B	4.8.27.4.8	39
Post-operational shutdown procedures	3	5.3.4.6.4d	14
Post-operational shutdown procedures	3	5.3.4.6.5d(4)	15
Post-operational shutdown procedures	3	5.3.4.6.3e	13
Pre-embarkation inspection	4	5.3.4.9.1.16.2	27
Preliminary calibration of equipment	4	5.3.4.1.7	11
Preliminary checks and adjustments	4	5.3.4.1.6	10
Preliminary servicing of equipment	4	5.3.4.1.5	10
Preparation for movement	2	5.2.3.3.8	8
Preparation for storage or shipment	4	5.3.4.9.1.25	30
Preparation for storage or shipment	B	5.3.1.9.8	63
Preparation for storage or shipment	B	5.4.1.7.9	79
Preparation for use	2	5.2.3.3.4	6
Prescreened photographs	B	4.8.27.2.3.1	36
Prescreening	B	3.113	16
Preservation, packaging, & marking	4	5.3.4.9.1.23	29
Preshop analysis	3	5.3.4.3	9
Preshop analysis	B	3.114	16
Preshop analysis procedures	3	5.3.4.3.1	9
Preshop analysis procedures	3	5.3.4.3.1g	10
Pretest setup procedures	3	5.3.4.6.3c	12
Pretest setup procedures	3	5.3.4.6.5c	14
Preventive maintenance	B	3.115	16
Preventive maintenance checklist	B	3.116	16
Preventive maintenance checklist	4	5.3.4.3.3	17
Preventive maintenance daily	B	3.117	16

INDEX

	PART	PARAGRAPH	PAGE
Preventive maintenance inspection WP	4	5.3.4.4	17
Preventive maintenance services inspection	B	3.118	16
Preventive maintenance services inspection	4	5.3.4.12	33
Procedural steps	B	4.8.12	27
Procedural steps	B	4.9.9	43
Procedural step titles	B	4.8.12.1	27
Procedures on illustrations	B	4.9.24.3.7	51
Procedures on illustrations	B	4.8.27.3.7	38
Processing unpacked equipment	4	5.3.4.1.3c	8
Proponent	B	3.120	16
Protective markings	B	4.8.22.5	32
Protective markings	B	4.9.19	46
Publication identification number	B	3.121	16
Publications list	6	5.2.2	2

Q

QA requirements work package	4	5.3.4.22	41
Quality assurance	B	5.4.1.7.13	80
Quality assurance	B	3.122	16
Quality assurance	B	5.3.1.9.12	63
Quality of material	B	5.3.1.9.13	63
Quality of material	B	5.4.1.7.14	80
Quality assurance symbol	B	4.8.21	32
Quality assurance symbol	B	4.9.18	46
Quantity column	5	5.3.6.9	15
Quantity	5	5.2.1.1g	3

R

Radio interference suppression	4	5.3.4.9.1.20	28
RAM	B	3.126	17
Random list	B	4.8.13.8b	29
Random list	B	4.9.10.7a	45
Raster	B	3.21	9
Reading Grade Level	B	3.123	17
Reading grade level	B	3.63	12
Rear matter	B	4.8.16.2.1.2	30
Changed	B	4.10.1.3	52
Defined	B	5.3.2	73
Preparation of	B	5.3	55
Rebuild	B	3.124	17
Reference designator	B	3.125	17
Reference designation	5	5.2.1.1c	3
Reference designator index work package	5	5.3.8.3	16
References	4	5.3.3e	5
References	2	5.2.3.3.1e	5
References	3	5.3.3e	7
References work package	6	5.2	2
Referencing	B	4.9.20	46

INDEX

	PART	PARAGRAPH	PAGE
Referencing	B	4.8.23	32
Equipment, components & parts	B	4.9.20.4	46
Equipment, components & parts	B	4.8.23.5	33
Equipment panel markings	B	4.8.23.7	33
Equipment panel markings	B	4.9.20.6	47
Figures	B	4.9.20.11	47
Figures	B	4.8.23.16	34
Footnotes	B	4.8.23.15	34
Index numbers	B	4.9.20.12	47
Index numbers	B	4.8.23.17	34
Items on diagrams	B	4.8.23.18	34
Items on diagrams	B	4.9.20.13	47
Maintenance tasks/procedures	B	4.8.23.13	33
Metric/U.S. Std Measurements	B	4.9.20.7	47
Metric/U.S. Std Measurements	B	4.8.23.8	33
NSNs & part numbers	B	4.8.23.6	33
NSNs & part numbers	B	4.9.20.5	46
Other TMs/IETMs	B	4.9.20.9	47
Other documents	B	4.9.20.1	46
Other documents	B	4.8.23.1	32
Repeating information	B	4.8.23.4	33
Specifications/Standards	B	4.9.20.2	46
Specifications/Standards	B	4.8.23.2	32
Tables	B	4.9.20.10	47
Tables	B	4.8.23.14	34
Temperature	B	4.9.20.8	47
Temperature	B	4.8.23.9	33
TM Divisions	B	4.8.23.10	33
Volumes	B	4.8.23.11	33
Within the TM	B	4.9.20.3	46
Within the TM	B	4.8.23.3	33
Work packages	B	4.8.23.12	33
Reliability	B	3.126	17
Reliability Centered Maintenance	B	3.127	17
Remarks	6	5.3.3.4	13
Removal	4	5.3.4.9.1.6	23
Remove	B	3.128	17
Repair	B	3.129	17
Repair	4	5.3.4.9.1.11	25
Repair, complete	B	3.25	9
Repair part	B	3.130	17
Repair parts	B	5.3.1.9.24.3	66
Repair parts for special tools	5	5.3.6.1	13
Repair parts list work package	5	5.3.6	13
Repeating information	B	4.8.23.4	33
Repeating illustrations	B	4.8.15.3	29
Replace	B	3.132	17
Replacement	4	5.3.4.9.1.11	25

INDEX

	PART	PARAGRAPH	PAGE
Reporting errors	B	5.4.1.7.2	77
Classified TMs	B	5.3.1.5.1c	59
Classified IETMs	B	5.4.1.7.2b	78
Oversize TMs	B	5.3.1.5.1b	59
Pocket size TMs	B	5.3.1.5.1b	59
TMs w/<8 pages	B	5.3.1.5.1b	59
Unclassified IETMs	B	5.4.1.7.2a	78
Unclassified TMs	B	5.3.1.5.1a	59
Reporting errors statement	B	5.3.1.5.1	58
Revision	B	3.133	17
Revisions	B	4.10	52
Complete, for page-bases TMs	B	4.10.2	53
Frame-based manuals	B	4.10.3	54
Symbols	B	4.10.3.1	54
Symbols for graphics	B	4.10.3.2	54
Revision summary frame	B	5.4.1.3	75
Rotating illustrations	B	4.8.15.1	29
RPSTLs	B	3.131	17
Arrangement of illustrations	5	5.3.9.1	17
Changes to	B	4.10.1.6	53
Cross-reference indexes	5	5.3.8	16
Deleted figures and items	B	4.10.1.6a	53
Figure numbers	B	4.8.27.4.3	39
Identical parts/numbers	5	5.3.9.3	17
Identical assemblies	5	5.3.9.4	17
Illustrations	B	4.8.27.3.4.2	38
Illustrations	5	5.3.9	16
Item changes	B	4.10.1.6b	53
Preparation of	5	5.3	4
Repair parts list WP	5	5.3.6	13
Separate	5	5.3.1	4
Special tools list WP	5	5.3.7	15
Use of illustrations	5	5.3.9.2	17
Work package	6	5.4	13
WPs included in a maintenance TM	5	5.3.2	4
WPs included in a DMWR	5	5.3.3	4

S

Safety, care, and handling	B	5.3.1.9.14	63
Safety, care, and handling	B	5.4.1.7.15	80
Safety devices & interlocks	4	4.10	2
Safety devices & interlocks	2	4.8	2
Safety devices & interlocks	3	4.10	2
Safety warnings	B	4.8.7.2.2	24
Scheduled maintenance	B	3.115	16
Schematic diagram	B	3.134	17
Scope	B	1.1	1

INDEX

	PART	PARAGRAPH	PAGE
Scope	6	1.1	1
General information WP	B	5.4.1.7.1	77
General information WP	B	5.3.1.9.1	61
Preshop analysis	3	5.3.4.3.1a	9
References WP	6	5.2.1	2
Security	4	5.3.4.18.2	38
Blank pages	B	4.8.22.3	32
COMSEC markings	B	4.8.22.6	32
Emergency markings	B	4.8.22.4	32
Marking	B	4.8.22.1	32
Overall classification	B	4.8.22.2	32
Protective markings	B	4.8.22.5	32
Security classification markings	B	4.8.22.1	32
Security classification markings	B	4.9.19	46
Security measures for electronic data	B	5.4.1.7.17	81
Security measures for electronic data	B	5.3.1.9.16	64
Selective application & tailoring	B	4.3	20
Selective application & tailoring	1	4.8	2
Selective application & tailoring	2	4.11	2
Selective application & tailoring	3	4.13	3
Selective application & tailoring	4	4.13	2
Selective application & tailoring	5	4.7	2
Selective application & tailoring	6	4.8	2
Self-test	2	5.2.3.3.5	6
Self-test, systems with	3	5.1.2.2.1	4
Semi-automatic testing and troubleshooting	3	5.1.1.2	4
Separate operational checkout procedures	3	5.3.4.6.5d(2)	14
Separate troubleshooting procedures	3	5.3.4.6.5d(3)	15
Sequential list	B	4.8.13.8c	29
Sequential list	B	4.9.10.7a	44
Serial number applications	5	5.3.6.8e	14
Service	B	3.135	18
Service upon receipt of materiel	4	5.3.4.1.3	7
Service upon receipt work package	4	5.3.4.1	6
Servicing	4	5.3.4.9.1.3	22
Set	B	3.136	18
Sets and kits	5	5.3.8.5	16
SGML	B	3.141	18
SGML declaration	B	3.142	18
Shelter requirements	2	5.2.3.3.3	6
Shelter requirements	4	5.3.4.1.2	7
Signal flow, portraying	B	4.8.27.4.8	39
Signal flow, portraying	B	4.9.24.4.4	51
Signature sheet	4	5.3.4.11.5	33
Siting	4	5.3.4.1.1	6
Siting requirements	2	5.2.3.3.2	5
Sling loading	4	5.3.4.9.1.4	23 SMR
code	B	3.137	18
SMR code	5	5.2.1.1f	3
SMR Code column	5	5.3.6.5	13
Source data for TMs	B	5.1	54
Spare part	B	3.138	18

INDEX

	PART	PARAGRAPH	PAGE
Special tools	B	3.139	18
Special applications	4	5.3.4.1.4.3	10
Special environmental conditions	2	5.2.3.3.1g	5
Special environmental conditions	3	5.3.3g	8
Special environmental conditions	4	5.3.3g	5
Special inspections	4	5.3.4.4.3	17
Special requirements for inspection tools	4	5.3.4.22.3	41
Special tool set	5	5.3.7.3	16
Special tools, TMDE, & support equipment	B	5.3.1.9.24.2	66
Special tools list work package	5	5.3.7	15
Specialized repair activity	B	3.140	18
Specifications	B	2.2.1	1
Standard checklist statements	4	5.3.4.12.3	34
Standard information tables	B	4.9.10.5	44
Standard information Tables	B	4.8.13.5	27
Standards	B	2.2.1	1
Standards of serviceability	4	5.3.4.4.2	17
Statement of responsibility	4	5.3.4.22.1	41
Storage of aircraft work package	4	5.3.4.19	39
Stowage & Decal/Data Plate Guide WP	2	5.2.3.5	9
Style	B	4.7	21
Style and format	1	4.6	2
Style and format	2	4.6	2
Style and format	3	4.8	2
Style and format	4	4.8	2
Style and format	5	4.5	2
Style and format	6	4.6	2
Style and format, examples of	B	4.8.1	21
Subassembly	B	3.143	18
Subject term listing	B	6.4	90
Supersedure notice	1	5.1.1e	3
Supersedure notice	2	5.2.2e	3
Supersedure notice	3	5.3.2e	6
Supersedure notice	4	5.3.2e	4
Supply catalog	B	3.144	18
Support information for RPSTL & TMDE	B	5.3.1.9.24	66
Support items work package	6	5.11	19
Supporting information			
AAL	B	3.3	8
AAL	6	5.6	15
BII	B	3.14	8
COEI	B	3.27	9
COEI/BII	6	5.5	13
CSI & FSCAP items	6	5.10	18
Expendable and durable items	B	3.54	11
Expendable and durable items	6	5.7	16
MAC	B	3.87	14
MAC	6	5.3	3
Mandatory replacement parts	6	5.9	18
Preparation of	6	5.1	2
References	6	5.2	2

INDEX

	PART	PARAGRAPH	PAGE
Supporting information (Continued)			
RPSTL	6	5.4	13
Support items WP	6	5.11	19
Tool ID list	6	5.8	17
Swimming	2	5.2.3.4.3	8
Switch settings	4	5.3.4.1.8b	12
Symbols	B	4.9.15	45
Symbols	B	4.8.18	31
Changed graphics	B	4.10.1.5	53
Changes	B	4.10.1.4	52
General information for	B	4.8.18.1	31
General information for	B	4.9.15.1	45
Metric	B	4.8.18.2	31
Metric	B	4.9.15.2	45
QA	B	4.8.21	32
QA	B	4.9.18	46
Revised graphics	B	4.10.3.2	54
Revisions	B	4.10.3.1	54
Work package	B	5.4.2b	89
System	B	3.145	18
System/subsystem index	3	5.3.4.2.2	9

T

Table of contents	B	4.8.16.2.1.1e	30
Table of contents	B	5.3.1.6	59
Table of tests and inspections	3	5.3.4.3.1g(b)	10
Tables	B	4.9.10	43
Tables	B	4.8.13	27
Footnotes to	B	4.9.10.6	44
Footnotes to	B	4.8.13.6	28
Format	B	4.8.13.4	27
Format	B	4.9.10.4	44
Location	B	4.9.10.1	43
Location	B	4.8.13.1	27
Numbering	B	4.9.10.2	44
Numbering	B	4.8.13.2	27
Referencing	B	4.9.20.10	47
Referencing	B	4.8.23.14	34
Standard information	B	4.8.13.5	27
Standard information	B	4.9.10.5	44
Technical content, IETMs	B	A.5.1.2.2	117
Technical content	B	A.5.1.1.1	116
Titles	B	4.8.13.3	27
Titles	B	4.9.10.3	44
Tabular information	B	4.8.13.7	28
Tags	B	3.146	18
Tailoring	B	4.3	20
Tailoring	B	3.147	18
Tailoring	1	4.8	2
Tailoring	2	4.8	2
Tailoring	3	4.13	3
Tailoring	4	4.13	2

INDEX

	PART	PARAGRAPH	PAGE
Tailoring	5	4.7	2
Tailoring	6	4.8	2
Tailoring guidance	B	6.3	90
Tailoring guidance - Frame-based TMs	B	A.5.1.2	116
Tailoring requirements - Additional	B	A.5.1.2.1	117
Tailoring requirements - Page-based TMs	B	A.5.1.1	115
Task	B	3.148	19
TB 750-93-1	B	5.1c	55
Technical content tables - IETMs	B	A.5.1.2.2	117
Technical content tables	B	A.5.1.1.1	116
Technical content preparation	B	5.1	54
Technical description work package	3	5.3.4.5	11
Technical manuals	B	3.149	19
Frame-based	B	3.59	12
Page-based	B	3.108	15
Types of	B	4.2	20
Test	B	3.150	19
Test and inspection	4	5.3.4.9.1.16	26
Test equipment	2	5.2.3.3.1a	4
Test equipment	3	5.3.3a	7
Test equipment	4	5.3.3a	4
Test logic method of troubleshooting	3	5.3.4.6.4c(1)	13
Test procedure, operational checkout	3	5.3.4.6.3d(1)	12
Test set message word index	3	5.3.4.6.3d(2)	12
Testing	4	5.3.4.9.1.22	28
Integrated system	3	5.1.2.2	4
Methods of	3	5.1.1	3
NDTI	B	3.100	15
Philosophy	3	5.1	3
Semi-automatic or automatic	3	5.1.1.2	4
Types of	3	5.1.2	4
Work packages	3	5.3	6
Text			
Display of	B	4.9.11	45
Method of troubleshooting	3	5.3.4.6.4c(2)	13
Placement in pocket TMs	B	4.8.15.2	29
Placement of	B	4.8.14	29
Theory of operation	3	5.3.4.5c	11
Preparation of	1	5.1	2
Required WPs	1	5.1.2	3
Work package	1	5.3	5
Theory presentation	1	5.3.1	5
Time between overhaul items	B	3.152	19
Title bar	B	4.9.13	45
Title block page	B	5.3.1.5	58
Title block page	B	3.153	19
Title block page	B	4.8.16.2.1.1e	30

INDEX

	PART	PARAGRAPH	PAGE
Titles			
Figures	B	4.9.24.4.2	51
Figures	B	4.8.27.4.6	39
For RPSTL figures	5	5.3.6.2	13
Paragraphs	B	4.8.11.2	27
Paragraphs	B	4.9.8.2	43
Procedural steps	B	4.9.9.2	43
Procedural steps	B	4.8.12.1	27
Tables	B	4.8.13.3	27
Tables	B	4.9.10.3	44
Work package	1	5.1.1c	2
Work package	2	5.2.2c	3
Work package	3	5.3.2c	6
Work package	4	5.3.2c	4
TM date	B	5.3.1.1.6	57
TM date	B	5.4.1.4.6	76
TM Divisions - referencing	B	4.8.23.10	33
TM Divisions	B	4.8.2	21
TM number for joint service TMs	B	5.3.1.1.1	57
TM number for joint service TMs	B	5.4.1.4.1	76
TM types, list of	B	A.5.1.1	115
TMDE	B	3.151	19
TMDE equipment	B	5.3.1.9.24.2	66
Tool identification list	6	5.8.2	18
Tool identification list WP	6	5.8	17
Tools and special tools	2	5.2.3.3.1b	4
Tools and special tools	3	5.3.3b	7
Tools and special tools	4	5.3.3b	5
Tools and test equipment requirements	6	5.3.3.3	13
Top-down generation breakdown	B	3.154	19
Torque limits work package	4	5.3.4.15	37
Towing	4	5.3.4.9.1.4	23
Transmittal sheet, change	B	5.3.1.3	58
Troubleshooting			
Development of	3	4.2	1
Factors to be considered	3	5.1a-5.1i	3
Fault reporting/isolation	3	5.1.2.1	4
Index work package	3	5.3.4.2	8
Integrated system	3	5.1.2.2	4
Malfunction index	3	5.3.4.2.1	8
Manual	3	5.1.1.1	3
Methods of	3	5.1.1	3
Multiplex read codes	3	5.3.4.6.4c(3)	13
Philosophy	3	5.1	3
Preshop analysis	B	3.114	16
Preshop analysis	3	5.3.4.3	9
Procedure content	3	5.2	5
Procedures	3	5.3.4.6.4c	13
Semi-automatic/automatic	3	5.1.1.2	4
System/subsystem index	3	5.3.4.2.2	9

INDEX

	PART	PARAGRAPH	PAGE
Troubleshooting (Continued)			
Test logic method of	3	5.3.4.6.4c(1)	13
Text method of	3	5.3.4.6.4c(2)	13
Types of	3	5.1.2	4
Types of WPs	3	5.3.4	8
Work package	3	5.3.4.6.4	13
Type size and style	B	4.8.3	23

U

Unit maintenance	B	3.155	19
Unpacking	4	5.3.4.1.3a	7
Unpacking	4	5.3.4.1.11a	12
Unpacking	4	5.3.4.9.1.27a	30
Unpacking and special handling	3	5.3.4.3.1b	9
Unusual environment/weather	2	5.2.3.4.2	8
Usable on code	B	3.156	19
Usable on code	5	5.3.6.8d	14
User	B	3.157	19

V

Van and shelter installations	4	5.3.4.1.4.4	10
Volumes			
referencing	B	4.8.23.11	33
Size and content	B	4.8.2.1	21

W

Warning data - PMS and PMI	B	5.3.1.2.1	58
Warning summary	B	5.3.1.2	58
Warning summary	B	4.8.16.2.1.1b	30
Warnings	B	4.9.5	41
Warnings	B	4.8.7	24
Display requirements for	B	4.9.5.1.1	41
Hazardous materials	B	4.8.7.2.3	24
Hazardous materials	B	4.9.5.2	42
Hazardous materials, format for	B	4.8.7.2.3.1	25
Icons	B	4.8.7.2	24
Safety	B	4.8.7.2.2	24
Use and placement of	B	4.8.7.1	24
Use and placement of	B	4.9.5.1	41
Warranty information	B	5.4.1.7.10	80
Warranty information	B	5.3.1.9.9	63
Weighing and loading work package	4	5.3.4.20	40
Weighing information	4	5.3.4.20.2	40
Wiring diagram	B	3.158	19
Wiring diagrams	4	5.3.4.23.4	42
Wiring diagrams work package	4	5.3.4.23	42
Wire identification	4	5.3.4.23.2	42

INDEX

	PART	PARAGRAPH	PAGE
Work package			
AAL	6	5.6	15
Abbreviations	B	5.4.2a	89
Aircraft inventory guide	4	5.3.4.18	38
Aircraft lubrication	4	5.3.4.5	18
Ammunition maintenance WP	4	5.3.4.6	19
Ammunition marking info	4	5.3.4.16	37
Auxiliary equipment	4	5.3.4.7	19
COEI/BII	6	5.5	13
Combined operational checkout & troubleshooting	3	5.3.4.6.5	14
Component checklist	3	5.3.4.4	10
CSI & FSCAP items	6	5.10	18
Depot mobilization rqmts	4	5.3.4.21	40
Description & use of controls and indicators	2	5.2.3.2	4
Equipment description & data	1	5.2	3
Equipment/user fitting instructions	4	5.3.4.2	12
Expendable & durable items	6	5.7	16
Facilities	4	5.3.4.8	19
Foreign ammunition	4	5.3.4.17	38
General information	B	5.3.1.9	61
General information, for IETMs	B	5.4.1.7	77
General Information - PMS	B	5.4.1.8	83
General information - PMS	B	5.3.1.10	67
General information - PMCs	B	5.3.1.11	68
General maintenance	4	5.3.4.10	31
Integrated system trouble	3	5.3.4.6.6	15
Introduction	B	5.3.1.8	61
MAC	6	5.3	3
MAC	6	5.3.3	12
Maintenance	4	5.3	3
Maintenance	4	5.3.4.9	19
Mandatory replacement parts	6	5.9	18
Manufactured items (illus)	4	5.3.4.14	36
NSN index	5	5.3.8.1	16
On-vehicle loading plan	2	5.2.3.6	9
Operation under unusual conditions	2	5.2.3.4	8
Operation under usual conditions	2	5.2.3.3	4
Operational checkout	3	5.3.4.6.3	12
Operational checkout	3	5.3.4.6	11
Operator instructions	2	5.2	2
Overhaul Inspection	4	5.3.4.13	36
Part number index	5	5.3.8.2	16
Phased maintenance	4	5.3.4.11	31
PMCS	4	5.3.4.3.2	14
PMCS Introduction	4	5.3.4.3.1	12
PMI	4	5.3.4.4	17
PMS	4	5.3.4.12	33
QA requirements	4	5.3.4.22	41
Reference designator index	5	5.3.8.3	16
References	6	5.2	2
Repair parts list	5	5.3.6	13

INDEX

	PART	PARAGRAPH	PAGE
Work package (Continued)			
RPSTL	6	5.4	13
RPSTL Introduction	5	5.3.5	5
Service upon receipt	4	5.3.4.1	6
Special tools list	5	5.3.7	15
Storage of aircraft	4	5.3.4.19	39
Stowage & data plate guide	2	5.2.3.5	9
Support items	6	5.11	19
Symbols	B	5.4.2b	89
Technical description	3	5.3.4.5	11
Testing and troubleshooting	3	5.3	6
Theory of operation	1	5.3	5
TMs, development of	B	4.9.1	39
Tool ID list	6	5.8	17
Torque limits	4	5.3.4.15	37
Troubleshooting	3	5.3.4.6.4	13
Troubleshooting index	3	5.3.4.2	8
Types of operator	2	5.2.3	3
Weighing and loading	4	5.3.4.20	40
Wiring diagrams	4	5.3.4.23	42
Work packages	B	3.159	19
Work packages	B	4.8.9	25
Additional	6	5.12	19
Assignment of last to nos	B	4.8.9.2.1	25
Changed	B	4.10.1.2	52
Content	B	4.8.2.3.2	22
Content	B	4.9.2.1.1	40
Content	2	5.2.1	2
Content of maintenance	4	5.3.1	3
Content of troubleshooting	3	5.3.1	6
Cross-reference indexes	5	5.3.8	16
Development of	B	4.9.2.1.3	40
Development of	B	4.8.2.3.3	22
Development of	1	4.7	2
Development of	2	4.7	2
Development of	3	4.9	2
Development of	4	4.9	2
Development of	5	4.6	2
Development of	6	4.7	2
Format	B	4.8.2.3	21
Identification info	1	5.1.1	2
Identification info	2	5.2.2	3
Identification info	3	5.3.2	6
Identification info	4	5.3.2	4
Identification number	B	4.8.9.4	26
Identification number	B	4.9.6.2	42
In IETMs	B	4.9.6	42
In IETMs	B	4.9.2.1	40
Initial setup information	B	4.9.6.1	42
Size	B	4.8.2.3.1	22
Sequential numbering	B	4.8.9.2	25
Sequence numbers for vols	B	4.8.9.2.2	25
Referencing	B	4.8.23.12	33

INDEX

	PART	PARAGRAPH	PAGE
Work packages (Continued)			
Title	1	5.1.1c	2
Title	2	5.2.2c	3
Title	3	5.3.2c	6
Title	4	5.3.2c	4
Title block	B	4.8.9.1	25
Parts information in	B	4.9.2.1.2	40
Page numbering	B	4.8.9.3	26
Types of troubleshooting	3	5.3.4	8
Types of maintenance	4	5.3.4	6

NOT MEASUREMENT SENSITIVE

MIL-STD-40051-1A(TM)
2 March 1999

DEPARTMENT OF DEFENSE STANDARD PRACTICE

TECHNICAL MANUALS

DESCRIPTION AND THEORY OF OPERATION

CONTENTS

PARAGRAPH PAGE

1. **SCOPE** 1
   1.1 Scope 1

2. **APPLICABLE DOCUMENTS** 1

3. **DEFINITIONS** 1

4. **GENERAL REQUIREMENTS** 1
   4.1 General 1
   4.2 Maintenance level applicability 1
   4.3 Preparation of digital data for electronic delivery 1
   4.4 Use of the DTDs / FOSIs 1
   4.4.1 Page-based TMs 1
   4.4.2 Frame-based TMs 1
   4.5 Content structure and format 2
   4.6 Style and format 2
   4.7 Work package development 2
   4.8 Selective application and tailoring 2

5. **DETAILED REQUIREMENTS** 2
   5.1 Preparation of description information and theory of operation 2
   5.1.1 Work package identification information 2
   5.1.2 Required descriptive and theory of operaton data work package 3
   5.1.3 Examples of required description and theory of operation work packages 3
   5.2 Equipment description and data work package 3
   5.2.1 Equipment characteristics, capabilities, and features 3
   5.2.2 Location and description of major components 4
   5.2.3 Differences between models 4
   5.2.4 Equipment data 4
   5.2.5 Equipment configuration 5
   5.3 Theory of operation work package 5
   5.3.1 Theory presentation 5

6. **NOTES** 6

FIGURE

1. Example of a station diagram 7

1. SCOPE.

1.1 Scope. This standard establishes the technical content requirements for the preparation of description and theory of operation data for major weapon systems, and their related systems, subsystems, equipment, weapons replacement assemblies (WRAs), and shop replacement assemblies (SRAs). The requirements are applicable for all maintenance levels through overhaul (depot) including Depot Maintenance Work Requirements (DMWRs) . The requirements can be used to develop TMs in a variety of output forms including interactive screen presentations (frame-based manuals) and paper paged-based manuals.

2. APPLICABLE DOCUMENTS.

The applicable documents in section 2 of MIL-STD-40051A apply to this Part.

3. DEFINITIONS.

The definitions in section 3 of MIL-STD-40051A apply to this Part.

4. GENERAL REQUIREMENTS.

4.1 General. Descriptive information with theory of operation shall be prepared for weapon systems, major equipment, components and applicable support and interface equipment. Information required to provide the user with a physical description, and functionally explain how the weapon system or equipment operates shall be included.

4.2 Maintenance level applicability. Requirements contained in this standard are applicable to all maintenance levels unless specifically noted in bold and in parentheses (i.e., **Direct Support**). The labeled requirements shall be applicable to all TMs containing that maintenance level. An explanation of all applicable Department of Army maintenance levels is provided in MIL-STD-40051A Appendix A.

4.3 Preparation of digital data for electronic delivery. Technical manual data prepared and delivered digitally in accordance with this standard shall be Standard Generalized Markup Language (SGML) tagged using the Document Type Definition (DTD) for Description and Theory of Operation and the Formatting Output Specification Instance (FOSI) or style sheets in accordance with MIL-STD-2361. Refer to MIL-STD-40051A (paragraph 4.6) for information on obtaining or accessing this DTD. SGML tags used in the modular DTD are noted throughout the text of this standard in bracketed, bold characters (i.e., <**descwp**>) as a convenience for the TM author and to ensure that the tags are used correctly when developing a document instance.

4.4 Use of the DTDs / FOSIs.

4.4.1 Page-based TMs. The DTDs referenced in this standard interpret the technical content and structure for the functional requirements contained in this standard and are mandatory for use. The FOSIs referenced herein interpret the style and format. As specified by the contracting activity, FOSIs or style sheets may be used to produce final reproducible paper copy for all TMs prepared in accordance with this standard. For additional information on DTDs and specific FOSIs, refer to MIL-STD-2361.

4.4.2 Frame-based TMs. The DTD referenced in this standard interprets the technical content and structure for the functional requirements contained in this standard and is mandatory for use. Development of frame-based TMs is accomplished through the use of the DTD combined with the requirements contained in MIL-PRF-87268. The requirements contained in MIL-PRF-87268 apply unless they conflict with the requirements in this standard. The requirements in this standard take precedence over the requirements contained in MIL-PRF-87268. A FOSI or style sheet is used to interpret the style and format for frame-based screen display. For additional information on DTDs and specific FOSIs or style sheets, refer to MIL-STD-2361.

SUPERSEDES PAGE 1 OF MIL-STD-40051-1A

4.5 Content structure and format. The examples provided herein and in MIL-STD-40051A are an accurate representation of the content structure and format requirements contained in this Part and shall be followed to permit the effective use of the DTD for Description and Theory of Operation.

4.6 Style and format. MIL-STD-40051A provides style and format requirements for the preparation of both page-based and frame-based TMs. These requirements are considered mandatory and are intended for compliance.

4.7 Work package development. Technical manual data developed in accordance with this standard shall be divided into individual, stand alone units of information called work packages. A work package shall consist of descriptive, operational, maintenance, troubleshooting, support, or parts information for the weapon system or equipment.

4.8 Selective application and tailoring. MIL-STD-40051A contains some requirements that may not be applicable to the preparation of all technical manuals. Selective application and tailoring of requirements contained in MIL-STD-40051A are the responsibility of the acquiring activity and shall be accomplished using Appendix A, Technical Manual Content Selection Matrixes, of MIL-STD-40051A. The applicability of some requirements is also designated by one of the following statements: unless specified otherwise by the acquiring activity; as/when specified by the acquiring activity; or when specified by the acquiring activity.

5. DETAILED REQUIREMENTS.

5.1 Preparation of description information and theory of operation. Description information and theory of operation shall be prepared and subdivided into individual work packages to provide the user with information for descriptive data about the weapon system or equipment, and an explanation of how the weapon system or equipment works. Weapon system and equipment description and theory of operation data shall be developed in narrative or tabular form, or by whatever method is most simple or effective to convey the specific TM application. When necessary for clarity or improved understanding, illustrations shall be used to support the narrative or tabular information. Each work package developed for description and theory of operation shall consist of WP identification information and the required descriptive and theory of operation data.

5.1.1 Work package identification information **<wpidinfo>**. All work packages shall include the identification information entries in the following sequential order, as applicable.

a. Maintenance levels <**maintlvl**>. The maintenance level(s) shall be included (e.g., Direct support maintenance).

b. End item nomenclature <**eicnomen**>. The nomenclature of the end item <**name**> and the system, subsystem, equipment or component name <**sysnomen**> covered in the WP (including AN type designation, if applicable) shall follow the applicable maintenance level. When applicable, the NSN <**nsn**>, model(s) <**modelno**>, and part number(s) <**partno**> should be placed below the nomenclature. When the WP covers more than one model and/or part number, all models and/or part numbers shall be listed.

c. WP title **<title>**. The title of the description information or the theory of operation data that is included in an individual work package shall be listed (i.e., M144 Shop Van Semitrailer Theory of Operation).

d. Effectivity notice <**appconfig**>. If applicable, an effectivity notice shall be included. When the work package does not apply to all configurations of the weapon system/equipment, the applicable configurations **<name>** covered by the work package shall be listed. Omit this requirement if the same tasks/procedures apply to all configurations. (If certain configurations require different tasks/procedures, separate work packages shall be prepared.)

REPRINTED WITHOUT CHANGE

e. Supersedure notice **<wpsupersede>**. **For page-based TMs**, if applicable, a supersedure notice shall be placed below the effectivity notice. If the WP supersedes a WP in the same manual, the supersedure notice shall be as follows: "This WP supersedes (WP number), (dated)." If the superseded WP is contained in another manual, the notice shall include the publication number as follows: "This WP supersedes (WP number), (dated), contained in TM X-XXXX-XXX-20." If an unclassified or classified WP supersedes a classified WP, the notice shall be as follows: "This WP supersedes (WP number), (dated), which should be destroyed in accordance with applicable security regulations."

f. Joint use. When TMs are acquired and specified by the Army for joint use with another or other Services (Joint Service TMs), work packages in joint publications which do not apply to all Services concerned shall be marked to indicate the Services to which they apply (for example, LANDING GEAR MAINTENANCE (ARMY ONLY)). For **IETMs** this data need not be displayed on the user's EDS.

5.1.2 Required descriptive and theory of operation data work packages. Descriptive information and theory of operation data shall be developed and divided into the following types of work packages. Nomenclature used to identify the weapon system, major equipment, components, and applicable support and interface equipment shall remain consistent throughout and between all work packages.

a. Equipment description and data work package **<descwp>**.

b. Theory of operation work package **<thrywp>**.

5.1.3 Examples of required description and theory of operation work packages. Refer to MIL-HDBK-1222 for typical examples of description and theory of operation WPs for both page-based and frame-based technical manuals.

5.2 Equipment description and data work package **<descwp>**. This work package shall contain the descriptive data requirements listed in 5.2.1. through 5.2.5, as applicable. If the descriptive data is provided in a separate operator's manual, a paragraph referencing the equipment description and data in the operator's manual shall suffice. Additional equipment description and data required for a higher maintenance level, but not included in the operator's manual, shall be included.

5.2.1 Equipment characteristics, capabilities, and features **<eqpinfo>**. An overall description of the equipment **<eqpdesc>** shall be prepared, including general capabilities, special features, and other like information (e.g., applications, limitations) which will be helpful in the operation and maintenance of the equipment. Unless otherwise directed, the information may be in narrative or tabular format.

a. The equipment type shall be stated, as shall the following equipment features: portability or mobility, operational and special environment, and remote control.

b. Components and their functions shall not be described unless essential to continuity. For functional data, reference shall be made to theory of operation.

c. When equipment covered varies in scope and application or has several applications within an end item, a brief explanation of the multiple usage and a simple diagram showing all aspects of a typical application shall be prepared.

d. For **ammunition TMs**, packing and packaging information <**ammo.packing**> shall be prepared, including number of rounds per pack.

5.2.2 Location and description of major components <**locdesc**>. Equipment location information shall be prepared including external and internal views of the equipment used to show general features and all major components. This information shall not duplicate information contained in the equipment data requirements and the equipment characteristics, capabilities, and features.

a. The equipment and weapon systems configuration shall be described as follows:

(1) A description of system areas and compartments shall be prepared, and the system equipment and components contained in the areas shall be identified. To identify and locate the listed system equipment the configuration description shall be supported by separate illustrations of each compartment and area. For **aircraft only**, a station diagram showing fuselage station, water line, and butt line, etc. shall be included. (Refer to figure 1.)

(2) The subsystems or equipment comprising the system shall be identified and described. Other equipment which is installed in the subject system compartments and areas need not be listed in the text or called out in the illustrations if they do not directly affect the operation or maintenance of the subject system. Descriptions of operator-attended equipment shall include general statements about the nature and purpose of the controls and indicators. The text shall be supported by illustrations.

(3) Descriptions and illustrations of associated-system equipment shall be limited to the major units of that equipment. The descriptions shall be more concise than those of the subject system equipment; otherwise, the same requirements shall apply. In the descriptions, emphasis shall be placed on associated systems equipment that constitutes operational or functional interfaces with the subject system. Such units shall be included in the system illustrations.

b. When the equipment is designed for use with other equipment, one or more diagrams shall be prepared to illustrate the use of the equipment. Only information pertaining to the user shall be prepared.

c. Location and contents of end item and major component identification plates shall be illustrated. Modification information, and warranty plates, stencils, or location of serial numbers shall be illustrated.

5.2.3 Differences between models <**eqpdiff**>. Significant differences affecting interchangeability shall be identified. Specifically, differences associated with equipment models or units of the same model shall be indicated that would affect operator or maintenance actions. These differences shall be related explicitly to equipment model, part number, or serial number ranges in such a manner that the TM user can identify the specific equipment configuration involved. When model differences exist but have no effect on operation or maintenance, this fact shall be stated.

5.2.4 Equipment data <**eqpdata**>.

a. Performance data shall be prepared, including numerical and other standard-related data applying to operational and maintenance functions. The equipment data shall summarize the specific capabilities and limitations of the equipment and other critical data needed by the TM user for maintenance of the equipment. Vehicle and cargo space dimensions and metric and other equivalents shall be included.

b. For systems, a list of the environmental control requirements, such as limited temperature, humidity, or other limited conditions shall be prepared. Reference shall be made to the work package(s) containing information on damage to be expected from exceeding these limits and procedures for minimizing the damage.

c. A summary shall be prepared that lists the effects of weather conditions on equipment affecting system capability or causing equipment damage. This summary shall include references to any special servicing procedures that must be accomplished because of climatic changes, such as adding antifreeze to coolants.

d. Instructions <**hazmat**> for the use, transportation, handling, storage, or disposal of such substances as fuels, toxic and hazardous substances, chemicals, ordnance, and munitions shall be prepared. These instructions shall meet the applicable requirements of the Federal Environmental Protection Standards (standards to be provided by the acquiring activity).

e. The energy efficiency rating shall be included for products that directly consume energy in normal operations and that commonly have a method of expressing energy efficiency.

5.2.5 Equipment configuration **<eqpconfig>**. When there are differences in the configuration for the same model of equipment or more than one model covered, the differences shall be clearly identified in text, tables, illustrations, or by whatever method is most simple or effective for the specific application.

5.3 Theory of operation work package **<thrywp>**. Theory of operation shall be prepared to provide the maintenance technician with adequate background information to support and perform maintenance tasks and troubleshooting on the weapon system, equipment or components. The amount of detail and complexity of the theory of operation presentation shall be in accordance with the Logistic Support Analysis (LSA) or Logistics Management Information (LMI) maintenance concept, the Maintenance Allocation Chart (MAC) or an approved maintenance plan. Theory of operation shall be provided as described in 5.3.1.

5.3.1 Theory presentation. Theory of operation shall consist of a functional narrative to explain the weapon system, equipment and component operation (electrical/electronic, hydraulic, pneumatic, and mechanical). Block diagrams, functional flow diagrams, schematics and other illustrations shall be included to support the text. Basic theory, normally found in textbooks, shall not be included. If the TM covers more than one model of equipment, or more than one configuration of weapon system, differences shall be explained or separate work packages may be used. Additional theory requirements are outlined below.

a. When necessary, introductory general information **<intro>** may precede the theory of operation narrative.

b. For simple systems or equipment/components, all theory **<systhry>** may be included in a single work package.

c. If the relative complexity of the weapon system/equipment is such that it is reasonable to first present the theory of the end item as a unit and then present the theory of its major system, subsystems, and component, it shall be presented in a series of work packages. A separate theory of operation work package shall be developed for each aircraft system. The work package may contain the functional operation for the system <**systhry**>, its subsystems <**ssysthry**> and its components (line replacement units (LRUs) <**lruthry**> and shop replacement units (SRUs)) <**sruthry**>, or when necessary for usability or clarity, subsystem and component theory of operation may be provided in separate work packages. Subsystem component theory of operation may be included in either the subsystem theory of operation work package or in a separate component theory of operation work package. Detailed component functional operation, common circuitry and wiring diagrams shall not be included unless necessary to understand system/subsystem function.

d. Theory narrative shall be to a depth necessary to support the technician in fault isolation to the level directed by the LSA/LMI and/or maintenance plan. The operation of the weapon system and related systems/components shall be presented in a logical flow. Significant input, output, and control signals, supply voltages and power supply output voltages shall be identified. If the equipment operates in more than one mode, each mode shall be explained and supported by functional block diagrams. Theory of operation shall describe detailed circuitry of all repairable components as directed by the LSA/LMI/maintenance plan. Internal circuits, their relationship to each other, input and output signals, waveforms and time-phase relationship to significant waveforms shall be included when required to understand detailed equipment operation. Theory shall not be prepared for nonrepairable, throw-away components.

6. **NOTES**.

The notes in section 6 of MIL-STD-40051A apply to this Part.

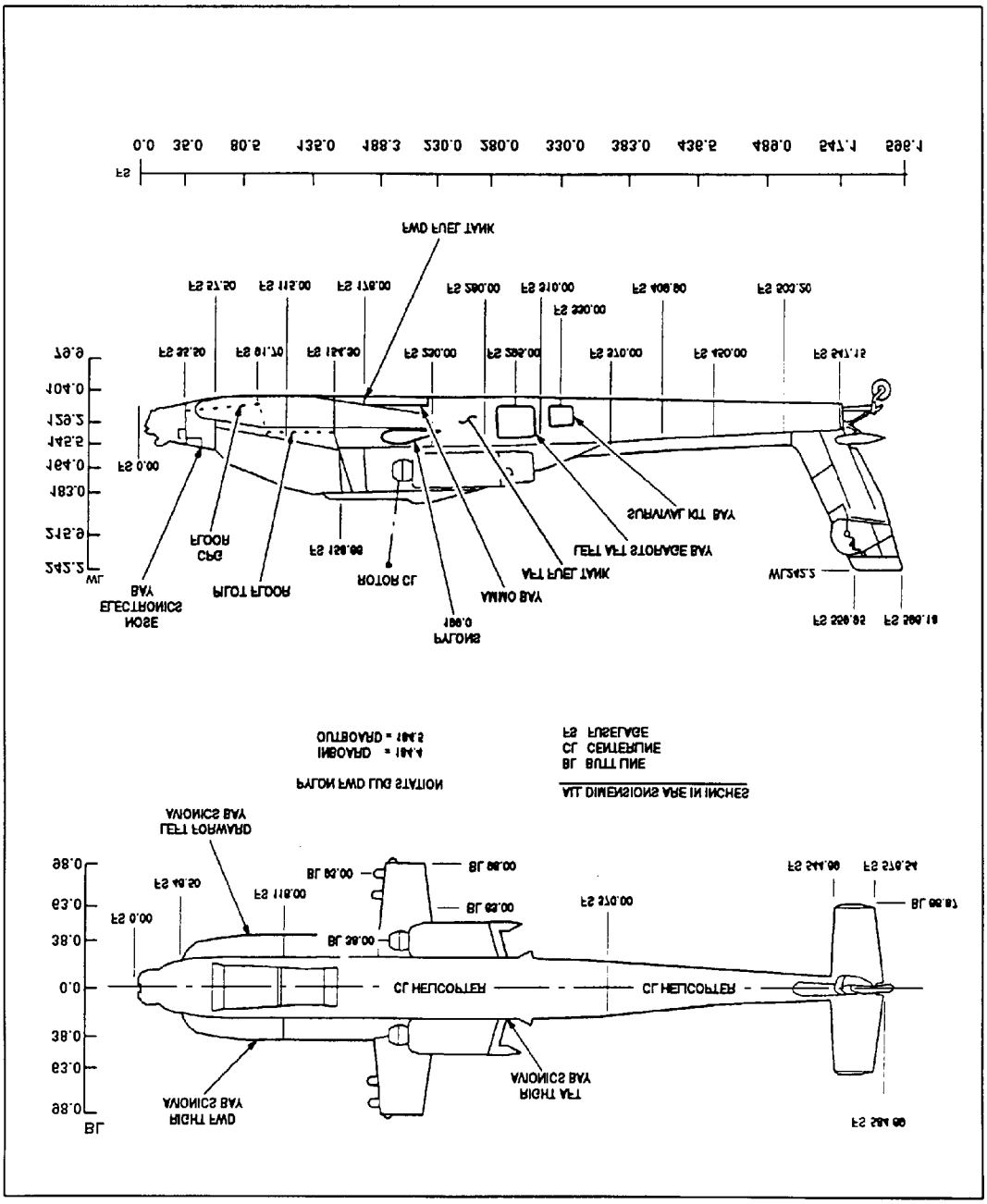

FIGURE 1. Example of a station diagram.

NOT MEASUREMENT SENSITIVE

MIL-STD-40051-2A(TM)
2 March 1999

DEPARTMENT OF DEFENSE STANDARD PRACTICE

TECHNICAL MANUALS

OPERATOR INSTRUCTIONS

CONTENTS

PARAGRAPH PAGE

1. **SCOPE** 1
1.1 Scope 1

2. **APPLICABLE DOCUMENTS** 1

3. **DEFINITIONS** 1

4. **GENERAL REQUIREMENTS** 1
4.1 General 1
4.2 Maintenance level applicability 1
4.3 Preparation of digital data for electronic delivery 1
4.4 Use of the DTDs / FOSIs 1
4.4.1 Page-based TMs 1
4.4.2 Frame-based TMs 1
4.5 Content structure and format 2
4.6 Style and format 2
4.7 Work package development 2
4.8 Safety devices and interlocks 2
4.9 Electrostatic Discharge (ESD) sensitive parts 2
4.10 Nuclear hardness 2
4.11 Selective application and tailoring 2

5. **DETAILED REQUIREMENTS** 2
5.1 Preparation of operator instructions 2
5.2 Operator instructions work packages 2
5.2.1 Work package content 2
5.2.2 Work package identification information 3
5.2.3 Types of operator instructions work packages 3
5.2.3.1 Examples of required operating instructions work packages 3
5.2.3.2 Description and use of controls and indicators work package 4
5.2.3.3 Operation under usual conditions work package 4
5.2.3.3.1 Initial setup information 4
5.2.3.3.2 Siting requirements 5
5.2.3.3.3 Shelter requirements 6
5.2.3.3.4 Assembly and preparation for use 6
5.2.3.3.5 Initial adjustments, before use, and self-test 6
5.2.3.3.6 Operating procedures 6
5.2.3.3.6.1 Operating procedure considerations 7
5.2.3.3.6.2 Decals and instruction plates 8
5.2.3.3.7 Operating auxiliary equipment 8
5.2.3.3.8 Preparation for movement 8
5.2.3.4 Operation under unusual conditions work package 8
5.2.3.4.1 Initial setup information 8
5.2.3.4.2 Unusual environment / weather 8
5.2.3.4.3 Fording and swimming 8
5.2.3.4.4 Interim Nuclear, Biological, and Chemical (NBC) decontamination procedures 8
5.2.3.4.5 Jamming and Electronic Countermeasures (ECM) procedures 9
5.2.3.4.6 Emergency procedures 9
5.2.3.5 Storage and decal/data plate guide work package 9

CONTENTS

PARAGRAPH PAGE

5.2.3.6 On-vehicle equipment loading plan work package 9
5.2.3.6.1 Introduction 9
5.2.3.6.2 Illustrated loading plan list(s) 9

6. **NOTES** 9

1. SCOPE.

1.1 Scope. This standard establishes the technical content requirements for the preparation of operator instructions for major weapon systems, and their related systems, subsystems, equipment, weapons replacement assemblies (WRAs), and shop replacement assemblies (SRAs). The requirements are applicable for all maintenance levels through overhaul (depot) including Depot Maintenance Work Requirements (DMWRs) . The requirements can be used to develop TMs in a variety of output forms including interactive screen presentations (frame-based manuals) and paper paged-based manuals.

2. APPLICABLE DOCUMENTS.

The applicable documents in Section 2 of MIL-STD-40051A apply to this Part.

3. DEFINITIONS.

The definitions in Section 3 of MIL-STD-40051A apply to this Part.

4. GENERAL REQUIREMENTS.

4.1 General. Operator instructions shall be prepared for weapon systems, major equipment, components and applicable support and interface equipment. Operating instructions shall describe the operation authorized for the operator/crew. Procedures and supporting illustrations shall be prepared so that personnel can prepare the weapon system/equipment for operation, identify and locate operational controls and indicators, and operate the weapon system/equipment safely and efficiently in both normal and emergency conditions.

4.2 Maintenance level applicability. Requirements contained in this standard are applicable to all maintenance levels unless specifically noted in bold and in parentheses (i.e., **Direct Support**). The labeled requirements shall be applicable to all TMs containing that maintenance level. An explanation of all applicable Department of Army maintenance levels is provided in MIL-STD-40051A, Appendix A.

4.3 Preparation of digital data for electronic delivery. Technical manual data prepared and delivered digitally in accordance with this standard shall be Standard Generalized Markup Language (SGML) tagged using the Document Type Definition (DTD) for Operators Instructions and the Formatting Output Specification Instance (FOSI) or style sheets in accordance with MIL-STD-2361. Refer to MIL-STD-40051A (paragraph 4.6) for information on obtaining or accessing this DTD. SGML tags used in the modular DTD are noted throughout the text of this standard in bracketed, bold characters (i.e., <**opim**>) as a convenience for the TM author and to ensure that the tags are used correctly when developing a document instance.

4.4 Use of the DTDs/FOSIs.

4.4.1 Page-based TMs. The DTDs referenced in this standard interpret the technical content and structure for the functional requirements contained in this standard and are mandatory for use. The FOSIs referenced herein interpret the style and format. As specified by the contracting activity, FOSIs or style sheets may be used to produce final reproducible paper copy for all TMs prepared in accordance with this standard. For additional information on DTDs and specific FOSIs, refer to MIL-STD-2361.

4.4.2 Frame-based TMs. The DTD referenced in this standard interprets the technical content and structure for the functional requirements contained in this standard and is mandatory for use. Development of frame-based TMs is accomplished through the use of the DTD combined with the requirements contained in MIL-PRF-87268. The requirements contained in MIL-PRF-87268 apply unless they conflict with the requirements in this standard. The requirements in this standard take precedence over the requirements contained in MIL-PRF-87268. A FOSI or style sheet is used to interpret the style and format for frame-based screen display. For additional information on DTDs and specific FOSIs or style sheets, refer to MIL-STD-2361.

SUPERSEDES PAGE 1 OF MIL-STD-40051-2A

4.5 Content structure and format. The examples provided in MIL-STD-40051A are an accurate representation of the content structure and format requirements contained in this Part and shall be followed to permit the effective use of the DTD for Operation Instructions.

4.6 Style and format. MIL-STD-40051A provides style and format requirements for the preparation of both page-based and frame-based TMs. These requirements are considered mandatory and are intended for compliance.

4.7 Work package development. Technical manual data developed in accordance with this standard shall be divided into individual, stand alone units of information called work packages. A work package shall consist of descriptive, operational, maintenance, troubleshooting, support, or parts information for the weapon system or equipment.

4.8 Safety devices and interlocks. Information shall be prepared pertaining to the purpose and location of all safety devices and interlocks in conjunction with the pertinent procedures.

4.9 Electrostatic discharge (ESD) sensitive parts. If the equipment contains ESD sensitive parts, components, or circuits, cautions and ESD labels shall be incorporated into the applicable tasks and procedures to ensure ESD sensitive parts are not damaged or degraded during Maintenance and operation. Refer to MIL-STD-40051A for requirements on labeling with ESD. Actions which could damage ESD sensitive parts, but which are not directly related to handling or operation of ESD sensitive parts, shall not be annotated with the ESD acronym, but shall be preceded by a caution statement.

4.10 Nuclear hardness. If the weapon system/equipment has nuclear survivability requirements (for example, over pressure and burst, thermal radiation, electromagnetic pulse, or transient radiation effects on electronics), cautions and Hardness-Critical Processes (HCP) labels shall be incorporated into the applicable tasks and procedures to ensure the hardness of the equipment is not degraded during handling or operation. Refer to MIL-STD-40051A for requirements on labeling with HCP. Actions which could degrade hardness, but which are not directly involved in establishing nuclear hardness, shall not be annotated with the acronym, but shall be preceded by a caution statement.

4.11 Selective application and tailoring. MIL-STD-40051A contains some requirements that may not be applicable to the preparation of all technical manuals. Selective application and tailoring of requirements contained in MIL-STD-40051A are the responsibility of the acquiring activity and shall be accomplished using Appendix A, Technical Manual Content Selection Matrixes, of MIL-STD-40051A. The applicability of some requirements is also designated by one of the following statements: unless specified otherwise by the acquiring activity; as/when specified by the acquiring activity; or when specified by the acquiring activity.

5. DETAILED REQUIREMENTS.

5.1 Preparation of operator instructions. Operator instructions shall be prepared and subdivided into individual work packages that provide the operator of the weapon system/equipment with descriptions and use of controls and indicators and operation of the weapon system/equipment under usual, unusual and emergency conditions. Weapon system and equipment operator data shall be developed in narrative or tabular form, or by whatever method is most simple or effective to convey the specific TM application.

5.2 Operator instructions work packages.

5.2.1 Work package content. Work packages shall include WP identification information, initial setup information, and all required operator instruction information. When initial setup information differs for specific operator instructions, additional work packages shall be developed. Work packages shall stand-alone and contain complete start-to-finish operator procedures. The words "END OF WORK PACKAGE" shall be placed below the last data item (i.e., text, illustration, etc.) of the work package. The operator instructions work packages described in 5.2.3 shall be prepared, as applicable.

REPRINTED WITHOUT CHANGE

5.2.2 Work package identification information <**wpidinfo**>. All work packages shall include the identification information entries in the following sequential order, as applicable.

a. Maintenance levels <**maintlvl**>. The maintenance level(s) shall be included (i.e., Operator maintenance).

b. End item nomenclature <**eicnomen**>. The nomenclature of the end item <**name**> and the system, subsystem, equipment or component <**sysname**> name covered in the WP (including AN type designation, if applicable). When applicable, the NSN <**nsn>,** the model(s) **<modelno**>, and part number(s) <**partno**> shall be placed below the nomenclature. When the WP covers more than one model and/or part number, all models and/or part numbers shall be listed.

c. WP title **<title>**. The title of the operating instructions task that is included in an individual work package shall be listed (i.e., M144 Shop Van Semitrailer Operation Under Usual Conditions).

d. Effectivity notice <**appconfig**>. If applicable, an effectivity notice shall be included. When the work package does not apply to all configurations of the weapon system/equipment, the applicable configurations **<name>** covered by the work package shall be listed. Omit this requirement if the same tasks/procedures apply to all configurations. (If certain configurations require different tasks/procedures, separate work packages shall be prepared.)

e. Supersedure notice <**wpsupersede**>. **For page-based TMs**, if applicable, a supersedure notice shall be placed below the effectivity notice. If the WP supersedes a WP in the same manual, the supersedure notice shall be as follows: "This WP supersedes (WP number), (dated)." If the superseded WP is contained in another manual, the notice shall include the publication number as follows: "This WP supersedes (WP number), (dated), contained in TM X-XXXX-XXX-20." If an unclassified or classified WP supersedes a classified WP, the notice shall be as follows: "This WP supersedes (WP number), (dated), which should be destroyed in accordance with applicable security regulations."

f. Joint use. When TMs are acquired and specified by the Army for joint use with another or other Services (Joint Service TMs), work packages in joint publications which do not apply to all Services concerned shall be marked to indicate the Services to which they apply (for example, LANDING GEAR MAINTENANCE (ARMY ONLY)). For **IETMs**, this data need not be displayed on the user's EDS.

5.2.3 Types of operator instructions work packages. The following types of operator instructions WPs shall be developed, as applicable.

a. Description and use of controls and indicators work package **<ctrlindwp>**.

b. Operation under usual conditions work package(s) **<opusualwp>**.

c. Operation under unusual conditions work package(s) **<opunuwp>**.

d. Stowage and decal/data plate guide work package **<stowagewp>**.

e. On-vehicle equipment loading plan work package **<eqploadwp>**.

NOTE: In cases where operating instructions are divided by crew station assignment (or auxiliary equipment), work packages shall be developed to support each crew-served station.

5.2.3.1 Examples of required operating instructions work packages. Refer to MIL-HBK-1222 for typical examples of operating instructions WPs for both page-based and frame-based technical manuals.

REPRINTED WITHOUT CHANGE

5.2.3.2 Description and use of controls and indicators work package **<ctrlindwp>**. Information shall be prepared for the description and use of all system or equipment controls and indicators. An introduction may be included in the work package. A description and use of controls and indicators **<ctrlinddesc>** shall be prepared for each equipment, assembly, or control panel having controls and indicators. A table **<ctrlindtab> (standard information)** or list may be used to explain the use of the controls and indicators. Illustrations shall be prepared for all operator controls and indicators. For each control and indicator, the following entries shall be provided.

a. The name (nomenclature) **<ctrlind>** of the control or indicator as it appears on the equipment. Controls and indicators that are not labeled, such as the accelerator or brake pedals, shall be identified. Each control and indicator shall be clearly labeled as it appears on the equipment.

b. The function of the control or indicator **<function>**.

c. An index number **<key>** , if an index number is used in lieu of nomenclature on the illustration to locate and identify the control or indicator on an illustration.

5.2.3.3 Operation under usual conditions work package **<opusualwp>**. Instructions to operate the weapon system/equipment and auxiliary equipment in all modes of operation shall be prepared. Any combination of control settings that will create a hazard to personnel or cause damage to equipment shall be preceded by a warning or caution. Instructions to ensure proper grounding of equipment shall be prepared. The operational tasks **<opertsk>** described in 5.2.3.3.2 through 5.2.3.3.8 shall be included, as applicable.

5.2.3.3.1 Initial setup information **<wpinfo>**. Initial setup information shall be included in each work package and shall always precede the technical content of the WP. It provides the maintenance technician with general information, equipment, parts, material, and authorized personnel required to perform and complete all the operating tasks included in the work package. Setup information requirements are described below.

a. Test equipment **<testeqp>**. All test equipment required to perform the procedure shall be listed by, as a minimum, name **<name>** and part **<partno>** or model number **<modelno>** designation, as a part of the identification number <**identno**>. For **page-based** manuals, test equipment shall be listed by name **<name>**, item number, and WP number <**xref**> if a separate WP has been developed containing an overall listing of test equipment for the system or equipment. This will eliminate the need to repeat the part and model numbers throughout the TM.

b. Tools and special tools **<tools>**. The tool kit (box) assigned to the mechanic (on a 1-per-mechanic-by-MOS basis) to be used in maintenance of a particular equipment shall be listed by, as a minimum, name **<name>**, tool kit number (**<partno>** or **<nsn>**), supply catalog (SC) **<sc>**, or TM number **<tmno>**. No tool in the kit shall be further identified. Other tools required for performance of all tasks for the maintenance levels covered in the work package shall also be identified in the initial setup. "Other tools" includes tools which are part of/components of shop sets authorized to sections/teams; tools authorized by RPSTL and CTA-50-970; special and fabricated tools; and items of Test, Measurement and Diagnostic Equipment (TMDE). For **page-based** manuals, if a separate WP has been developed containing an overall listing of tools and special tools, the tools and special tools shall be listed by name **<name>**, item number, and WP number <**xref**>. This will eliminate the need to repeat the part and model numbers throughout the TM.

c. Materials/parts **<mtrlpart>**. All expendable items and support materials, mandatory parts, bulk items, and flight safety critical aircraft parts shall be listed by, as a minimum, name **<name>**, part number **<partno>**, if any, and quantity <**qty**>, if applicable. The item number and supporting information work package **<xref>** which lists these items shall be given. For **page-based** manuals, if a separate WP has been developed containing an overall listing of materials/parts, the materials/parts shall be listed by name **<name>**, item number, and WP number <**xref**>. This will eliminate the need to repeat the part and numbers throughout the TM. For example:

Grease (Item 5, WP 0120 00)
Range lock (P/N 8675309)
Frequency Converter, A31029270-1
Bracket Assembly, Chemical Alarm, A3070119
Clamp, Loop, TM 11-1520-238-23P, Group 110503

NEW PAGE

d. Personnel required <**persnreq**>. Personnel <**name**> and the number of personnel <**qty**> shall be identified if the task requires more than one. The Military Occupational Specialty (MOS) designation <**nameid**> is not necessary, but it may be included. For example,

Personnel Required
Artillery Mechanic 68M10 (1)
Artillery Mechanic 66J30 (1)

e. References <**ref**>. When necessary, other work packages, TMs, foldouts and other sources (<**extref**>/<**xref**>) that are needed to complete the operating tasks shall be listed here. Only references not listed in equipment conditions shall be listed. For example,

References
TM 9-1015-252-20&P
WP 0100 00

f. Equipment conditions <**eqpconds**>. Any special equipment conditions required before the procedure can be started shall be listed here and cross-referenced to the appropriate source (<**extref**> or <**xref**>) for setting up the condition <**condition**>. For example,

Equipment Condition
Firing mechanism removed (WP 0010 00)

g. Special environmental conditions <**specenv**>. Any special environmental conditions (such as ventilation, lighting, or temperature) <**condition**> that are required shall be listed here. The reason <**reason**> that such conditions are needed shall be explained. For example,

Special Environmental Condition
Darkened area required for testing lights.

h. Drawings required <**dwgreq**>. When necessary, drawings (which are not included in the work package) required to complete the maintenance tasks shall be listed here. Drawings shall be listed by title <**dwgname**> and drawing number <**dwgno**>. For example,

Drawings Required
Power Supply Schematic (132E470092)

i. Estimated time to complete the task <**time.to.comp**>. If required by the acquiring activity, the estimated time it will take to complete the operating task shall be included. Approved Logistics Support Analysis (LSA) or Logistics Management Information (LMI), and service experience, performance data on similar equipment, and all other reliability, availability, and maintainability (RAM) data available shall be used to estimate the time required to complete the task.

5.2.3.3.2 Siting requirements <**site**>. Siting instructions peculiar to the equipment shall be prepared. Operational features shall be considered, such as the following.

a. Location.

b. Proximity to power sources.

c. Effective ranges.

d. Terrain requirements to avoid screening reflections, ground clutter, and other poor operational conditions due to terrain.

e. Technical requirements.

f. Shelter locations.

g. Compensating for adverse siting conditions.

h. When the equipment contains large components, such as towers and antennas, that require orientation to a baseline during siting.

i. Mobile equipment oriented during installation.

5.2.3.3.3 Shelter requirements <**shelter**>. For equipment normally housed in a permanent or semipermanent shelter (other than a military truck, van, or transportable shelter) during use, the following information shall be prepared.

a. Amount of floor, wall, and height space required.

b. A plan for a typical layout.

c. Required weight capacity of the building floor.

d. Dimensions required for installed equipment.

e. Total weight that the floor must support and the area in square feet over which the total weight will be distributed.

f. Environmental conditions (e.g., venting).

g. Power requirements.

h. Unusual requirements specific to equipment, such as air-conditioning.

i. Architectural and engineering data on beam sizes, lengths, bending moments, and required supports shall not be included.

5.2.3.3.4 Assembly and preparation for use <**prepforuse**>.

a. Procedures shall be prepared for unpacking, assembly, and installation. When the equipment is shipped or delivered in specially designed containers, unpacking instructions shall be prepared. If the containers are to be used again, kept for future use, turned in to supply, or if any special disposition is required, the necessary procedures shall be prepared. Assembly and installation procedures shall be prepared when needed. These instructions shall be supported by illustrations. As applicable, power requirements, connections, and initial control settings needed for installation purposes shall be included.

b. For security measures for electronic data, instructions shall be prepared for handling, loading, scrubbing, overwriting, or unloading classified electronic data under usual conditions. Instructions shall meet the requirements as they pertain to automation security.

5.2.3.3.5 Initial adjustments, before use, and self-test <**initial**>. Procedures shall be prepared for any routine checks, self-test, or adjustments that the operator must make before putting the equipment in operation.

5.2.3.3.6 Operating procedures <**oper**>. The following operating instructions shall be prepared, as applicable.

a. All steps necessary to bring the equipment from OFF through STANDBY condition to full operation, including all necessary warnings and cautions.

b. Procedures for each mode of operation, e.g., manual, automatic, local, remote, etc. The use and relative advantage of each mode shall also be described.

c. Description of the equipment anti-jamming and interference reduction features, the advantage of each feature, and the operating procedures to be followed. Supporting illustrations (such as indicator displays, waveforms, etc.) shall be included which provide typical observations of jamming and interference for evaluation by the operator.

d. Operator turn-off procedures, including all steps necessary to bring the equipment from full operation through STANDBY to OFF condition.

e. Procedures covering operation of the equipment during emergency conditions (control failure, air failure, lube oil failure, loss of cooling water, etc.). Emergency operating instructions shall be included. Warning or caution to return the equipment to proper operation when the emergency is over shall also be included.

f. Procedures to turn the equipment off during an emergency (fire, water, smoke, hazard to personnel, loss of coolant, normal power, etc.).

g. Operating instructions for misfire, hangfire, and other procedures applicable to ammunition.

h. Operating procedures explaining how the equipment is operated in conjunction with auxiliary equipment or how it operates when integrated with other equipment.

i. When specified by the acquiring activity, operating procedures containing the identification, loading, initializing and downloading of applicable operational and diagnostic software shall be included. Identification of the software shall include the purpose, configuration applicability and version information. Procedures that verify that the proper software has been loaded and is operating properly shall also be included. Examples of specific types of data that may be applicable to these work packages are:

(1) Descriptions of screen data and interpretation of message formats.

(2) Operator actions based on screen display.

(3) Data entry by the Operator.

(4) Saving or purging data.

(5) Processing of messages.

(6) Software transfer procedures.

(7) Reviewing message and entry formats.

5.2.3.3.6.1 Operating procedure considerations. The following considerations should be taken into account when preparing operating procedures.

a. Initial safety requirements (actions, inspections, and emergency turn-off procedures).
b. If a particular operating procedure or step is assigned to a specific crew-served position (e.g., gunner), the assignment must be indicated.
c. Connection of any accessory equipment not permanently connected.

d. Instructions for obtaining or confirming the presence of all critical inputs such as power, coolant, air, signal, air-conditioning, etc. Specific values for critical inputs (power, coolant, air, etc.) shall also be included.

e. Procedures for setting controls and making adjustments which must be accomplished by the operator prior to equipment turn-on.

f. Procedures for determining operational readiness and the acceptable indications expected from built-in indicators, such as meters, lamps, gages, displays, and recorder readouts.

g. Milestones in the operational status of the equipment, indicated by brief statements, such as "The generator is now in STANDBY."

h. Visual or audible observations which occur as a result of an operator action, such as boom lowering, sweep rotation, blower motor running, etc.

5.2.3.3.6.2 Decals and instruction plates **<instructplt>**. Decals and operating instruction plates located on the equipment, which are essential for operation, shall be clearly illustrated, so that all information is legible. Related warning and caution decals and plates shall be included. An illustration(s) shall be prepared to show the location of all applicable decals and plates.

5.2.3.3.7 Operating auxiliary equipment **<operaux>**. If applicable, procedures shall be prepared for putting the auxiliary equipment into operation, operating it, and putting it in standby or shutdown status. If these procedures are published in another TM covering the auxiliary equipment, reference shall be made to that TM in accordance with the requirements of MIL-STD-40051A.

5.2.3.3.8 Preparation for movement **<prepmove>**. Preparation for movement procedures shall be prepared if the equipment is designed for movement and it can be readied for movement by the operator. Procedures shall be prepared for actions such as disassembly, folding, and telescoping. Illustrations shall be prepared, as required, to support the text. This information shall not duplicate the "assembly and preparation for use" requirements contained in 5.2.3.3.4.

5.2.3.4 Operation under unusual conditions work package **<opunuwp>**. Instructions shall be prepared for operation under unusual conditions. Preventive or protective measures to be taken beyond the operator's capabilities shall be identified. Instructions to ensure proper grounding of equipment shall be prepared. For security measures for electronic data, instructions shall be prepared for handling, loading, purging, overwriting, or unloading classified electronic data under unusual conditions. Instructions shall meet current security regulations as they pertain to automation security. The operational tasks **<opunutsk>** described in 5.2.3.4.2 through 5.2.3.4.6 shall be included, as applicable.

5.2.3.4.1 Initial setup information **<wpinfo>**. Initial setup information requirements are provided in 5.2.3.3.1.

5.2.3.4.2 Unusual environment/weather **<unusualenv>**. Procedures shall be prepared for operation under conditions of extreme moist heat, extreme dry heat, extreme cold, salt air, sea spray, dust storms, sand storms, high altitudes, snow, mud, and other similar conditions. Ranges of environmental/weather operating conditions considered for the system addressed shall be defined.

5.2.3.4.3 Fording and swimming **<fording>**. If applicable, procedures for fording and swimming the equipment, shall be provided.

5.2.3.4.4 Interim Nuclear, Biological, and Chemical (NBC) decontamination procedures **<decon>**. As applicable and specified by the acquiring activity, interim general NBC decontamination procedures to be performed until NBC decontamination facilities are available shall be prepared. Other decontamination TMs shall be referenced only when necessary.

5.2.3.4.5 Jamming and Electronic Countermeasures (ECM) procedures **<ecm>**. As applicable, procedures shall be prepared for operation of the equipment in an ECM environment through transmitted and reflected deception signals and through transmitted and reflected jamming.

5.2.3.4.6 Emergency procedures **<emergency>**. Procedures shall be prepared for temporarily adapting the equipment and the operating procedures to meet the reduction of power, partial failure, failure of a portion of the equipment, or similar conditions when continued equipment use is required.

5.2.3.5 Stowage and decal/data plate guide work package **<stowagewp>**. This work package shall begin with an introduction **<intro>** which gives the scope of the work package. Data on the location **<stowinfo>** of applicable COEI, BII, and AAL items shall be prepared. An illustration shall be included to facilitate the location of the items. Data on the location **<decalinfo>** of all decals and data plates shall be prepared. As applicable, illustrations detailing the locations of the decals and data plates shall be included.

5.2.3.6 On-vehicle equipment loading plan work package **<eqploadwp>**. This work package shall be prepared when applicable to the equipment. The loading plan shall include information provided by the acquiring activity. The data described in 5.2.3.6.1 and 5.2.3.6.2 shall be included.

5.2.3.6.1 Introduction **<intro>**. A brief scope statement shall be prepared explaining the purpose of the loading plan and identifying the equipment covered by the on-vehicle equipment loading plan work package.

5.2.3.6.2 Illustrated loading plan list(s) **<loaddesc>**. An illustration identifying and locating the on-vehicle equipment shall be included. External and internal views shall be used, if necessary. As applicable, both tactical and nontactical situation loading configurations shall be shown.

6. **NOTES**.

The notes in section 6 of MIL-STD-40051A apply to this Part.

NOT MEASUREMENT SENSITIVE

MIL-STD-40051-3A(TM)
2 March 1999

DEPARTMENT OF DEFENSE STANDARD PRACTICE

TECHNICAL MANUALS

TROUBLESHOOTING PROCEDURES

CONTENTS

PARAGRAPH PAGE

1. **SCOPE** 1
1.1 Scope 1

2. **APPLICABLE DOCUMENTS** 1

3. **DEFINITIONS** 1

4. **GENERAL REQUIREMENTS** 1
4.1 General 1
4.2 Development of troubleshooting instructions 1
4.3 Maintenance level applicability 1
4.4 Depot maintenance work requirements 1
4.5 Preparation of digital data for electronic delivery 2
4.6 Use of DTDs / FOSIs 2
4.6.1 Page-based TMs 2
4.6.2 Frame-based TMs 2
4.7 Content structure and format 2
4.8 Style and format 2
4.9 Work package development 2
4.10 Safety devices and interlocks 2
4.11 Electrostatic discharge (ESD) sensitive parts 2
4.12 Nuclear hardness 2
4.13 Selective application and tailoring 3

5. **DETAILED REQUIREMENTS** 3
5.1 Testing and troubleshooting philosophy 3
5.1.1 Methods of testing and troubleshooting 3
5.1.1.1 Manual (non-automatic) troubleshooting 3
5.1.1.2 Semi-automatic or automatic testing and troubleshooting 4
5.1.1.3 Testing and troubleshooting using built-in-test equipment 4
5.1.2 Types of testing and troubleshooting information 4
5.1.2.1 Fault reporting/fault isolation information **(aircraft and major weapon systems)** 4
5.1.2.2 Integrated system testing and troubleshooting (**aircraft and major weapon systems)** 4
5.1.2.2.1 Integrated systems having self-test or built-in test capability 4
5.1.2.2.2 Integrated systems requiring the use of system peculiar test sets 4
5.1.2.2.3 Integrated systems requiring the use of common test equipment 5
5.2 Troubleshooting procedures content 5
5.3 Testing and troubleshooting work packages 6
5.3.1 Work package content 6
5.3.2 Work package identification information 6
5.3.3 Initial setup information 7
5.3.4 Types of testing and troubleshooting work packages 8
5.3.4.1 Examples of required testing and troubleshooting work packages 8
5.3.4.2 Troubleshooting index work package 8
5.3.4.2.1 Malfunction/symptom index 8
5.3.4.2.2 System/subsystem index 9
5.3.4.3 Preshop analysis work package **(DMWRs only)** 9
5.3.4.3.1 Preshop analysis procedures **(DMWRs only)** 9
5.3.4.4 Component checklist work package **(DMWRs only)** 10
5.3.4.4.1 Introduction 10

CONTENTS

PARAGRAPH PAGE

5.3.4.4.2 Component checklist 10
5.3.4.5 Technical description work packages (**for page-based Aircraft Troubleshooting Manuals only**) 11
5.3.4.6 Operational checkout and troubleshooting procedures work packages 11
5.3.4.6.1 Operational checkout and troubleshooting procedures content 11
5.3.4.6.2 Operational checkout and troubleshooting procedure work package development 11
5.3.4.6.3 Operational checkout work package **(page-based TMs only)** 12
5.3.4.6.4 Troubleshooting work package **(page-based TMs only)** 13
5.3.4.6.5 Combined operational checkout and troubleshooting work package 14
5.3.4.6.6 Integrated system troubleshooting procedures work packages 15

6. **NOTES** 15

FIGURE

1. Example of a cover sheet/frame for preshop analysis checklist 16
2. Example of a component checklist 17
3. Example of content for an operational checkout procedure 18
4. Example of content for a troubleshooting procedure (Method A) 19
5. Example of content for a troubleshooting procedure (Method B) 20
6. Example of content for a troubleshooting procedure (Method C) 21
7. Example of content for a combination testing and troubleshooting procedure 22

1. SCOPE.

1.1 Scope. This standard establishes the technical content requirements for the preparation of troubleshooting procedures for major weapon systems, and their related systems, subsystems, equipment, weapons replacement assemblies (WRAs), and shop replacement assemblies (SRAs). The requirements are applicable for all maintenance levels through overhaul (depot) including Depot Maintenance Work Requirements (DMWRs). The requirements can be used to develop TMs in a variety of output forms including interactive screen presentations (frame-based manuals) and paper paged-based manuals.

2. APPLICABLE DOCUMENTS.

The applicable documents in section 2 of MIL-STD-40051A apply to this Part.

3. DEFINITIONS.

The definitions in section 3 of MIL-STD-40051A apply to this Part.

4. GENERAL REQUIREMENTS.

4.1 General. Troubleshooting procedures shall be prepared for weapon systems, major equipment, components and applicable support and interface equipment. Troubleshooting procedures and supporting illustrations shall be prepared so that operator/crew and maintenance personnel can perform all required operator through depot level (overhaul) troubleshooting.

4.2 Development of troubleshooting instructions. Troubleshooting instructions shall cover all items comprising the weapon system/equipment, such as assemblies, subassemblies, components, wiring, junction boxes, and accessories. Troubleshooting procedures shall isolate faults to the part(s) authorized by the RPSTL for repair or replacement at the maintenance level addressed. Tasks shall be presented in the order in which they are performed. Approved Logistics Support Analysis (LSA) or Logistics Management Information (LMI), and service experience, performance data on similar equipment, and all other reliability, maintainability, and supportability (RMS) and operational availability (Ao) data available shall be used in the preparation of specific troubleshooting procedures. Troubleshooting procedures shall begin with testing, observed problems, a fault symptom or malfunction and shall diagnose to a single fault/failure. Troubleshooting shall refer to specific maintenance or repair tasks to correct the fault. Instructions, where applicable, shall flow from operator level through unit/AVUM, direct support/AVIM, and general support until the fault is isolated. Procedures shall include schematics and illustrations as needed (or shall reference to required schematics, etc.). Troubleshooting data shall be test and fault-isolation oriented. Troubleshooting instructions shall include detailed inspection and troubleshooting information. Instructions shall include or reference to functional descriptions of subsystems being diagnosed to aid the operator/technician. The method used for identifying system equipment test points, including the requirements and methods of determining defects through visual inspection, shall be explained.

4.3 Maintenance level applicability. Requirements contained in this standard are applicable to all maintenance levels unless specifically noted in bold and in parentheses (i.e., **Direct Support**). The labeled requirements shall be applicable to all TMs containing that maintenance level. An explanation of all applicable Department of Army maintenance levels is provided in MIL-STD-40051A, Appendix A.

4.4 Depot maintenance work requirements. When the acquiring activity specifies that a Depot Maintenance Work Requirement (DMWR) shall be prepared to the best commercial practices, the depot requirements contained in this standard shall be used only as a guide; therefore, the conforming modular DTD for troubleshooting procedures cannot be used.

REPRINTED WITHOUT CHANGE

4.5 Preparation of digital data for electronic delivery. Technical manual data prepared and delivered digitally in accordance with this standard shall be Standard Generalized Markup Language (SGML) tagged using the Document Type Definition (DTD) for Troubleshooting Procedures and the Formatting Output Specification Instance (FOSI) or style sheets in accordance with MIL-STD-2361. Refer to MIL-STD-40051A (paragraph 4.6) for information on obtaining or accessing this DTD. SGML tags used in the DTD are noted throughout the text of this standard in bracketed, bold characters (i.e., <**tswp**>) as a convenience for the TM author and to ensure that the tags are used correctly when developing a document instance.

4.6 Use of DTDs/FOSIs.

4.6.1 Page-based TMs The DTDs referenced in this standard interpret the technical content and structure for the functional requirements contained in this standard and are mandatory for use. The FOSIs referenced herein interpret the style and format. As specified by the contracting activity, FOSIs or style sheets may be used to produce final reproducible paper copy for all TMs prepared in accordance with this standard. For additional information on DTDs and specific FOSIs, refer to MIL-STD-2361.

4.6.2 Frame-based TMs The DTD referenced in this standard interprets the technical content and structure for the functional requirements contained in this standard and is mandatory for use. Development of frame-based TMs is accomplished through the use of the DTD combined with the requirements contained in MIL-PRF-87268. The requirements contained in MIL-PRF-87268 apply unless they conflict with the requirements in this standard. The requirements in this standard take precedence over the requirements contained in MIL-PRF-87268. A FOSI or style sheet is used to interpret the style and format for frame-based screen display. For additional information on DTDs and specific FOSIs or style sheets, refer to MIL-STD-2361.

4.7 Content structure and format. The examples provided herein and in MIL-STD-40051A are an accurate representation of the content structure and format requirements contained in this Part and shall be followed to permit the effective use of the DTD for Troubleshooting Procedures.

4.8 Style and format. MIL-STD-40051A, provides style and format requirements for the preparation of both page-based and frame-based TMs. These requirements are considered mandatory and are intended for compliance.

4.9 Work package development. Technical manual data developed in accordance with this standard shall be divided into individual, stand alone units of information called work packages. A work package shall consist of descriptive, operational, maintenance, troubleshooting, support, or parts information for the weapon system or equipment.

4.10 Safety devices and interlocks. Information shall be prepared pertaining to the purpose and location of all safety devices and interlocks in conjunction with the pertinent procedures.

4.11 Electrostatic discharge (ESD) sensitive parts. If the equipment contains ESD sensitive parts, components, or circuits, cautions and ESD labels shall be incorporated into the applicable tasks and procedures to ensure ESD sensitive parts are not damaged or degraded during Maintenance and operation. Refer to MIL-STD-40051A for requirements on labeling with ESD. Actions which could damage ESD sensitive parts, but which are not directly related to handling or operation of ESD sensitive parts, shall not be annotated with the ESD acronym, but shall be preceded by a caution statement.

4.12 Nuclear hardness. If the weapon system/equipment has nuclear survivability requirements (for example, over pressure and burst, thermal radiation, electromagnetic pulse, or transient radiation effects on electronics), cautions and Hardness-Critical Processes (HCP) labels shall be incorporated into the applicable tasks and procedures to ensure the hardness of the equipment is not degraded during handling or operation. Refer to MIL-STD-40051A for requirements on labeling with HCP. Actions which could degrade hardness, but which are not directly involved in establishing nuclear hardness, shall not be annotated with the acronym, but shall be preceded by a caution statement.

SUPERSEDES PAGE 2 OF MIL-STD-40051-3A

4.13 Selective application and tailoring. MIL-STD-40051A contains some requirements that may not be applicable to the preparation of all technical manuals. Selective application and tailoring of requirements contained in MIL-STD-40051A are the responsibility of the acquiring activity and shall be accomplished using Appendix A, Technical Manual Content Selection Matrixes, of MIL-STD-40051A. The applicability of some requirements is also designated by one of the following statements: unless specified otherwise by the acquiring activity; as/when specified by the acquiring activity; or when specified by the acquiring activity.

5. DETAILED REQUIREMENTS.

5.1 Testing and troubleshooting philosophy. Testing and troubleshooting data shall be developed to the extent required to maintain aircraft and other major weapon systems, equipment, components and support equipment at the authorized maintenance level in accordance with the Logistics Support Analysis (LSA) or Logistics Management Information (LMI), Maintenance Allocation Chart (MAC), or Maintenance Plan and the Source, Maintenance, and Recoverability (SMR) codes developed for the weapon system/equipment. Other factors to be considered in the development of troubleshooting procedures include, but are not limited to, the following:

a. Technical experience (target audience).

b. User environment.

c. System quick-turnaround requirements.

d. Test equipment requirements and availability.

e. Automated versus manual testing.

f. Replaceable component and part reliability.

g. Ease of testing.

h. Test access time.

i. Test time.

Troubleshooting information shall be provided in combination with test procedures. This testing and troubleshooting information shall guide the technician, in as practical a manner as possible, to the system, subsystem, equipment, weapons replacement assembly (WRA), shop replacement assembly (SRA), or further to the replaceable part, interconnecting wire, or mechanical linkage which caused the malfunction or failure. All information required to perform the tests and evaluate probable malfunctions of the assembled systems or equipment shall be provided.

5.1.1 Methods of testing and troubleshooting. The number of interrelated systems, assemblies, subassemblies, and components, types of equipment, and maintenance plan shall be taken into consideration as to the type and depth of testing and troubleshooting instructions to be developed. Based on the complexity of the system or equipment, manual (non-automatic), semi-automatic or automatic testing and troubleshooting methods shall be used. Functional testing is usually performed using a test set or test console whereby technicians make end-to-end checks of the system or equipment to ensure it will perform the function it was intended to do.

5.1.1.1 Manual (nonautomatic) troubleshooting. Troubleshooting procedures using nonautomatic test equipment shall be established on a system test concept. To meet the objectives of reduced maintenance downtime and decreased fault detection time, malfunction symptoms shall be identified to specific points of entry into the testing/troubleshooting cycle. Every effort shall be employed to avoid repetition of the time consuming end-to-end test.

5.1.1.2 Semi-automatic or automatic testing and troubleshooting. Many high performance systems have been designed to accept the use of semi-automatic/automatic test equipment. These systems are designed and programmed for rapid electronic test in the interest of reducing maintenance downtime to fault isolate and repair.

5.1.1.3 Testing and troubleshooting using built-in-test equipment. Built-in-test capabilities are designed to operate in various formats. One of these formats is built-in-test using preprogrammed magnetic test tapes or diagnostic software, another is the incorporation of electronically controlled sensors within the systems to be tested. Testing procedures shall identify the specific part number tape or the software required for test performance. Sensors, installed at critical points in aircraft systems, are used to detect discrepancies in system operation during flight. Readout capability varies from magnetic tape in-flight monitors to digital display maintenance monitoring panels. Special documentation has been designed to properly interpret these displays and isolate and correct malfunctions.

5.1.2 Types of testing and troubleshooting information. Testing and troubleshooting information includes fault reporting/fault isolation data for aircraft and major weapon systems and detailed testing and troubleshooting procedures for aircraft and weapon system equipment, systems, components and support equipment. When applicable, integrated system testing and troubleshooting for aircraft and major weapon systems shall also be included.

5.1.2.1 Fault reporting/fault isolation information **(aircraft and major weapon systems)**. Fault reporting information provides flight crews and ground operating personnel with a standardized means for reporting and interpreting aircraft and major weapon systems malfunctions and fault symptoms. Fault isolation information is designed for use in rapid isolation of faults revealed during aircraft flight or weapon system operational mission and when the aircraft/weapon system is in an operational configuration on the ground. This data shall instruct maintenance personnel as to what maintenance actions to perform and/or what procedures to use to correct reported faults. Fault reporting information and the fault isolation data are designed to be used together. Fault isolation information coverage shall be limited to faults identified in the fault reporting data which require specific procedures to isolate the cause. Fault reporting data shall reference the fault isolation data to the maximum extent practical for isolation of indicated malfunctions.

5.1.2.2 Integrated system testing and troubleshooting **(aircraft and major weapon systems)**. When several systems are dependent upon each other for proper operation, the interdependent systems, as a unit, are identified as an integrated system. The testing of an integrated system is an operational checkout of the interdependent systems, less non-associated systems, and shall reflect the assumption that the technician performing the check is qualified on the aircraft and is familiar with its systems and subsystems. Integrated system troubleshooting procedures shall be presented in two levels, first, the integrated system as a unit, second the systems that make up the integrated system. Development and content of testing and troubleshooting for integrated systems shall be determined based on the systems having self-test or built-in test capabilities or requiring the use of a system peculiar test set or common test equipment. An integrated system may involve the need to use all three types of test capabilities. These compound applications require more specifics on the criteria of which components or signals are tested by which method. In addition to coverage of the integrated system, the associated systems making up the integrated system shall be covered separately and individually.

5.1.2.2.1 Integrated systems having self-test or built-in test capability. Testing and troubleshooting procedures shall include what components or functions are tested, and what inputs are required for proper testing (power parameters, signals, motion, air, hydraulic, etc.). If wiring tests are included they should have defined testing parameters (which wires are tested, resistance tolerances, open definitions, wire-to-wire and wire-to-ground resistances, and any peculiar wire criteria) and what fault verification is required for a failure indication.

5.1.2.2.2 Integrated systems requiring the use of system peculiar test sets. Testing and troubleshooting procedures shall include identical parameters as those in 5.1.2.2.1 with the additional requirement for special cables or support equipment that may be required.

5.1.2.2.3 Integrated systems requiring the use of common test equipment. Testing and troubleshooting procedures shall focus on actual readings or signal requirements so sources of common test equipment will not be restricted.

5.2 Troubleshooting procedures content. The procedures shall contain all essential and pertinent information that would be included in any other form of maintenance procedure. This includes warnings, cautions, notes, power turn-on procedures, precheckout procedures, reference diagrams, and initial switch settings. In addition to external causes for malfunctions, troubleshooting should also identify symptoms resulting from failure of every spare and repair part authorized for replacement at user level. Troubleshooting procedures shall be prepared assuming one malfunction at a time is being corrected. The operator/technician shall be instructed to perform any applicable self-tests, alignments, and inspections before beginning any other troubleshooting procedures. As applicable, an operational check shall be specified to be performed after the fault is corrected to ensure correct operation of the system. Troubleshooting procedural instructions shall be prepared following these general requirements.

a. A concise explanation of the testing and troubleshooting format and an explanation on how to use the testing and troubleshooting procedures with the malfunction/symptom index, when applicable.

b. The location for each component, accessory, connector, or junction box in the system under test shall be provided or a reference to the equipment description and data work package shall be included. The text shall also identify every test connector or other test point to be used in the test.

c. A complete list of test options shall be stipulated by the troubleshooting procedure. List any self-tests that are associated with the system. Self-test schemes shall be described as the prime troubleshooting tool, with manual troubleshooting prepared to supplement the instructions where the self-test leaves off or fails to locate the malfunction. Build the procedure using system self-tests before using external test equipment.

d. Test setup procedures and post-test teardown procedures.

e. Complete step-by-step and troubleshooting procedures, including instructions required for use and application of installed on-line testing equipment. Procedures shall take into account controls, test point accessibility, indicator displays, and the feasibility of using BITE or automated test equipment where available.

f. Test procedures (e.g., system turn on, identification of time required to run and complete the system test, and an indication of any possible mid-test interruptions or stoppages and how to respond to them).

g. Backup diagrams showing all test points, input and output signals, logic charts, schematics, signal flow diagrams, tables, and other illustrations as required for comprehensible understanding of the procedures.

h. Include any information that will aid the operator/technician, such as waveforms; resistance data; fluid pressures; voltage levels; references to test diagrams, functional diagrams, text, etc.; and alignment procedures, checkout procedures, or other scheduled maintenance procedures. Connector numbers, pin designations, etc., shall be identified.

i. Special attention shall be given to aircraft or major weapon system interface wiring fault isolation procedures. Wiring fault isolation procedures shall include the following types of data, as applicable:

(1) Specific wire reading access points and resistances for wiring components (where practical).

(2) Wire-to-wire and wire-to-ground criteria for circuit integrity.

(3) Special wire definition where required (including interconnecting criteria for proper sealing or terminal application), and special notations where wire harnesses should be completely replaced and not repaired.

(4) It is also essential when developing fault isolation procedures, to provide or refer to ground stud tables which include type, location and wires connected, charts for both connectors and terminal boards, and a wire number log to identify any wire to its prime wiring diagram.

5.3 Testing and troubleshooting work packages. Testing and troubleshooting work packages shall be developed for the overall weapon system/equipment and each maintainable system, subsystem, and WRA/SRA for each applicable maintenance level as indicated in the approved MAC or maintenance plan.

5.3.1 Work package content. Work packages shall include WP identification information, initial setup information, and all required testing and troubleshooting information. When initial setup information differs for specific testing and troubleshooting procedures, additional work packages shall be developed. Work packages shall stand-alone and contain complete start-to-finish troubleshooting procedures. The words "END OF WORK PACKAGE" shall be placed below the last data item (i.e., text, illustration, etc.) of the work package. The testing and troubleshooting work packages described in 5.3.4 shall be prepared, as applicable.

5.3.2 Work package identification information <**wpidinfo**>. All work packages shall include the identification information entries in the following sequential order, as applicable .

a. Maintenance levels <maintlvl>. The maintenance level(s) shall be included (i.e., Direct support maintenance).

b. End item nomenclature <**eicnomen**>. The nomenclature of the end item <**name**> and the system, subsystem, equipment or component name <**sysnomen**> covered in the WP (including AN type designation, if applicable) shall follow the applicable maintenance level. When applicable, the NSN **<nsn>**, model(s) <**modelno**>, and part number(s) <**partno**> should be placed below the nomenclature. When the WP covers more than one model and/or part number, all models and/or part numbers shall be listed.

c. WP title **<title>**. The title of the testing or troubleshooting task that is included in an individual work package shall be listed (i.e., M144 Shop Van Semitrailer Testing and Troubleshooting).

d. Effectivity notice <**appconfig**>. If applicable, an effectivity notice shall be included. When the work package does not apply to all configurations of the weapon system/equipment, the applicable configurations **<name>** covered by the work package shall be listed. Omit this requirement if the same tasks/procedures apply to all configurations. (If certain configurations require different tasks/procedures, separate work packages shall be prepared.)

e. Supersedure notice <**wpsupersede**>. **For page-based TMs**, if applicable, a supersedure notice shall be placed below the effectivity notice. If the WP supersedes a WP in the same manual, the supersedure notice shall be as follows: “This WP supersedes (WP number), (dated).” If the superseded WP is contained in another manual, the notice shall include the publication number as follows: “This WP supersedes (WP number), (dated), contained in TM X-XXXX-XXX-20.” If an unclassified or classified WP supersedes a classified WP, the notice shall be as follows: “This WP supersedes (WP number), (dated), which should be destroyed in accordance with applicable security regulations.”

f. Joint use. When TMs are acquired and specified by the Army for joint use with another or other Services (Joint Service TMs), work packages in joint publications which do not apply to all Services concerned shall be marked to indicate the Services to which they apply (for example, LANDING GEAR MAINTENANCE (ARMY ONLY)). For **IETMs** this data need not be displayed on the user's EDS.

5.3.3 Initial setup information **<wpinfo>**. Initial setup information shall be included in each work package and shall always precede the technical content of the WP. It provides the maintenance technician with general information, equipment, parts, material, and authorized personnel required to perform and complete all the testing and operating tasks included in the work package. Setup information requirements are described below.

a. Test equipment **<testeqp>**. All test equipment required to perform the procedure shall be listed by, as a minimum, name **<name>** and part **<partno>** or model number **<modelno>** designation, as part of the identification number <**identno**>. For **page-based** manuals, test equipment shall be listed by name **<name>**, item number, and WP number <**xref**> if a separate WP has been developed containing an overall listing of test equipment for the system or equipment. This will eliminate the need to repeat the part and model numbers throughout the TM.

b. Tools and special tools **<tools>**. The tool kit (box) assigned to the mechanic (on a 1-per-mechanic-by-MOS basis) to be used in maintenance of a particular equipment shall be listed by, as a minimum, name **<name>**, tool kit number (**<partno>** or **<nsn>**), supply catalog (SC) **<sc>**, or TM number **<tmno>**. No tool in the kit shall be further identified. Other tools required for performance of all tasks for the maintenance levels covered in the work package shall also be identified in the initial setup. "Other tools" includes tools which are part of/components of shop sets authorized to sections/teams; tools authorized by RPSTL and CTA-50-970; special and fabricated tools; and items of Test, Measurement and Diagnostic Equipment (TMDE). For **page-based** manuals, if a separate WP has been developed containing an overall listing of tools and special tools, the tools and special tools shall be listed by name **<name>**, item number, and WP number <**xref**>. This will eliminate the need to repeat the part and model numbers throughout the TM.

c. Materials/parts **<mtrlpart>**. All expendable items and support materials, mandatory parts, bulk items, and flight safety critical aircraft parts shall be listed by, as a minimum, name **<name>**, part number **<partno>**, if any, and quantity <**qty**>, if applicable. The item number and supporting information work package **<xref>** which lists these items shall be given. For **page-based** manuals, if a separate WP has been developed containing an overall listing of materials/parts, the materials/parts shall be listed by name **<name>**, item number, and WP number <**xref**>. This will eliminate the need to repeat the part and numbers throughout the TM. For examples, see Part 2, page 4a, para 5.2.3.3.1c.

d. Personnel required **<persnreq>**. Personnel **<name>** and the number of personnel **<qty>** shall be identified if the task requires more than one. The Military Occupational Specialty (MOS) designation **<nameid>** is not necessary, but it may be included. For example,

Personnel Required
Artillery Mechanic 68M10 (1)
Artillery Mechanic 66J30 (1)

e. References **<ref>**. When necessary, other work packages, TMs, foldouts and other sources (**<extref>**/**<xref>**) that are needed to complete the operating tasks shall be listed here. Only references not listed in equipment conditions shall be listed. For example,

References
TM 9-1015-252-20&P
WP 0100 00

f. Equipment conditions **<eqpconds>**. Any special equipment conditions required before the procedure can be started shall be listed here and cross-referenced to the appropriate source (**<extref>** or **<xref>**) for setting up the condition **<condition>**. For example,

Equipment Condition
Firing mechanism removed (WP 0010 00)

g. Special environmental conditions **<specenv>**. Any special environmental conditions (such as ventilation, lighting, or temperature) **<condition>** that are required shall be listed here. The reason **<reason>** that such conditions are needed shall be explained. For example,

Special Environmental Condition
Darkened area required for testing lights.

h. Drawings required **<dwgreq>**. When necessary, all drawings (which are not included in the work package) required to complete the maintenance tasks shall be listed here. Drawings shall be listed by title **<dwgname>** and drawing number **<dwgno>**. For example,

Drawings Required
Power Supply Schematic (132E470092)

i. Estimated time to complete the task **<time.to.complete>**. If required by the acquiring activity, the estimated time it will take to complete the operating task shall be included. Approved Logistics Support Analysis (LSA) or Logistics Management Information (LMI), and service experience, performance data on similar equipment, and all other reliability, availability, and maintainability (RAM) data available shall be used to estimate the time required to complete the task.

5.3.4 Types of testing and troubleshooting work packages. The following types of testing and troubleshooting WPs shall be developed, as applicable.

a. Troubleshooting index work package **<tsindxwp>**.
b. Preshop analysis work package **<pshopanal> (DMWR only)**.
c. Component checklist work package **<compchklistwp> (DMWR only)**.
d. Technical description work package <**techdescwp**> (**For page-based Aircraft Troubleshooting Manual only**).
e. Operational checkout and troubleshooting procedures work packages.

5.3.4.1 Examples of required testing and troubleshooting work packages. Refer to MIL-HDBK-1222 for typical examples of testing and troubleshooting WPs for both page-based and frame-based technical manuals.

5.3.4.2 Troubleshooting index work package <**tsindxwp**>. This work package shall consist of either a malfunction/symptom index <**tsindx**> or a system/subsystem index <**tsindx**>. Initial setup information is not required for this work package.

5.3.4.2.1 Malfunction/symptom index <**tsindx**>. When all probable faults have been determined and described, prepare a malfunction/symptom index work package using the exact description of the fault or symptom as was used in the troubleshooting procedures. Group symptoms to common system areas both in the malfunction/symptom index and in the troubleshooting procedures. For example, if a system has a data link, communications, radar, display, and tracking systems, the symptoms would be grouped into each related area. All fault symptoms of a communications nature would fall into the communications group. The symptoms may be further divided into functions within the communications group that would be common. The same would be done for radar, data link, display, and tracking systems. This index shall include the following data.

a. List all fault symptoms or known malfunctions in alphabetical order by malfunction/symptom <**malfunc**> or by built-in test code/fault message word<**messageword**> and link this information to the applicable testing and troubleshooting WP <**xref**> or the required corrective action <**action**>. For **page-based TMs**, reference to the WP sequence number **<xref>**.

b. For complex systems, list symptoms by subsystem categories <**ts-category**>, if necessary, and use codes that help identify specific items. (Subsystem categories shall be listed in alphabetical order or by code.)

c. Catalog malfunctions/symptoms by method of detection, if this aids usability.

d. Fault symptom descriptions (titles) shall be standardized between malfunction/symptom index work packages and troubleshooting procedures work packages.

For **page-based TMs only**, when applicable, one troubleshooting malfunction/symptom index work package shall be prepared for all troubleshooting for the system/equipment and a chapter title page (Refer to MIL-STD-40051A shall be prepared titled "Master Malfunction/Symptom Index", preceded by the maintenance level (e.g., Unit Master Malfunction/ System Index). This title page is not required when individual malfunction/symptom indexes are developed for each system/subsystem or component.

5.3.4.2.2 System/subsystem index **<tsindx>**. This index shall consist of a list of specific systems, subsystems, assemblies and components <**sysnomen**> requiring troubleshooting, linked to the applicable testing and troubleshooting WP <**xref**> or required corrective action <**action**>. For **page-based TMs**, reference to the WP sequence number **<xref>**.

5.3.4.3 Preshop analysis work package **(DMWRs only) <pshopanalwp>**. Preshop analysis shall apply when data indicates that an inspection or test is more effective in determining useful life of a system, subsystem, or component than a mandatory disassembly. The preshop analysis work package shall include WP identification information (Refer to 5.3.2), initial setup information (Refer to 5.3.3) and preshop analysis procedures.

5.3.4.3.1 Preshop analysis procedures (**DMWRs only**) **<pshopanal>**. Preshop analysis procedures shall consist of the following information.

a. Scope <**scope**>. The purpose and coverage of the preshop analysis shall be stated.

b. Unpacking and special handling. Procedures shall be prepared for removing the item, assemblies, subassemblies, or components from the shipping containers and packaging material. Instructions shall be prepared on any needed handling requirements for hazardous material, electrostatic sensitive devices, precious metal content, classified material, or critical material. Instructions shall also be prepared for any special condemnation procedures for the item and its assemblies and subassemblies.

c. Checking attached documents. Instructions shall be prepared for checking all tags, forms, and documents attached to the item to determine the reason for its return and to identify any other obvious faults or damage.

d. External inspection. Procedures shall be prepared for external inspection of the item to determine if it is complete and if there is any obvious external damage.

e. Cleaning and preservation. Instructions shall be prepared for cleaning the item to prepare it for preshop analysis testing. They shall include the procedures for any temporary preservation or corrosion protection measures needed to protect the item until the work required is started.

f. Component checklist. When specified by the acquiring activity, a component checklist shall be prepared as a separate work package (Refer to 5.3.4.4).

g. Preshop analysis procedures. Detailed procedures shall be prepared for performing a preshop analysis. The acquiring activity shall determine if the preshop analysis procedures shall be a narrative or be structured as a checklist. A checklist permits the inclusion of the name and signature of the person performing the analysis and any remarks that are required based on the results of the analysis.

(1) Narrative procedures. Preshop analysis text shall be presented in procedural format. Test and analysis procedures shall be presented in a logical sequence—not to cause any unnecessary disassembly—and in the order in which they should be done. Each procedure shall be identified by a step number. Procedures shall be arranged in groups by major components, assemblies, and subassemblies. Each group shall be headed with an applicable title.

(2) Checklist. The checklist shall include the following data.

(a) Cover sheet/frame **<coverpage>**. The cover sheet/frame (Refer to figure 1) shall contain an area to record the following item information: part number **<partno>**; serial number **<serialno>**; NSN **<nsn>**, modifications required **<modreq>**; reason for overhaul or repair **<reason>**; unpacking of secondary items required **<secitem>**; review of tags **<revtag>** or forms **<revform>** with the item, name **<name>** and signature **<sig>** of person doing the analysis; and date **<date>**.

(b) Table of tests and inspections. This table **(for paged-based TMs this table is considered standard information**) **<pshopchk.tab**> shall have an entry for each test and inspection procedure. Each entry shall have, as a minimum, the following information: inspection point (the item or area to be inspected) <**insppt**>, condition <**condition**>, action **<action**>, remarks, and identification of the personnel performing the inspection. For **paged-based TMs**, if the procedure is too complex or lengthy to be included in the checklist, a reference to the WP where the procedures or actions are provided, shall be included in the checklist.

5.3.4.4 Component checklist work package **(DMWR only) <compchklistwp>**. A component checklist work package (Refer to 5.3.4.3.1f) shall be prepared when required to support the preshop analysis procedures. This work package shall consist of the data described in 5.3.4.4.1 and 5.3.4.4.2.

5.3.4.4.1 Introduction **<intro>**. When necessary, the checklist shall be preceded by a brief explanation of its use.

5.3.4.4.2 Component checklist **<compchklist>**. The checklist (Refer to figure 2) shall contain the following data, as applicable.

a. Name/nomenclature of the equipment/item **<name>**.

b. Serial number **<serno>**.

c. Date received **<daterec>**.

d. Received from (identify unit) **<recfrom>**.

e. Component name **<compname>**.

f. NSN **<nsn>**.

g. Part number **<partno>**.

h. Quantity required **<qty>**.

i. Quantity received **<qtyrec>**.

j. Visual damage found **<damage>**.

5.3.4.5 Technical description work packages **<techdescwp>** (**for page-based Aircraft Troubleshooting Manuals only**). A technical description work package may be developed for each system and subsystem of the weapon system, as applicable. The work package may include the following information.

a. Equipment description and data **<descproc>**. When equipment description and data is required to support the testing and troubleshooting procedures it shall be prepared in accordance with the requirements provided in 5.2, MIL-STD-40051-1A, as applicable. If this information is provided in another TM, a reference to the TM may be included in lieu of including the descriptive data.

b. Controls and indicators **<ctrlindproc>**. When it is necessary to provide information concerning the description and use of the controls and indicators to support the testing and troubleshooting procedures, it shall be prepared in accordance with the requirements provided in 5.2.3.2, MIL-STD-40051-2A, as applicable. If this information is provided in another TM, a reference to the TM may be included in lieu of including the controls and indicator data.

c. Theory of operation **<thryproc>**. When theory of operation is required to support the troubleshooting procedures, it shall be prepared in accordance with the requirements provided in 5.3, MIL-STD-40051-1A, as applicable. If this information is provided in another TM, a reference to the TM may be included in lieu of including the theory data.

5.3.4.6 Operational checkout and troubleshooting procedures work packages. A series of work packages shall be developed containing operational checkout and troubleshooting procedures for integrated weapon systems and for each independent system and subsystem of the weapon system, as applicable. The content and development requirements for these work packages is provided in 5.3.4.6.1 through 5.3.4.6.6.

5.3.4.6.1 Operational checkout and troubleshooting procedures content. Operational checkout and troubleshooting procedures shall guide a technician in as practical a manner as possible in detecting, isolating, and correcting system or equipment failure/malfunctions. Procedures shall ultimately lead to isolating faults to an appropriate adjustment, replaceable parts, interface wires, or mechanical linkage. Instructions shall direct repair or replacement of parts authorized for repair or replacement at the maintenance level covered. Procedures shall be accompanied by schematics, signal flow diagrams, waveforms, tables and other illustrations for comprehensive understanding of the procedures. When schematics are required as backup data, they shall be referenced or may be contained in the same WP. The schematics shall integrate fluid, mechanical, electrical, and electronic components. Illustrations may also be included that locate and identify the controls and displays used to perform the testing and troubleshooting procedures. If ATE is used and a Test Program Set has been developed, the operational checkout and troubleshooting procedures contained in the Test Program Set shall not be duplicated. A reference to the Test Program Set shall be provided. All operational checkout and troubleshooting work packages shall include WP identification information (Refer to 5.3.2) and initial setup information (5.3.3).

5.3.4.6.2 Operational checkout and troubleshooting procedure work package development. For **frame-based TMs**, operational checkout and troubleshooting procedures shall be combined and contained in the same WP. For **page-based TMs**, based on the following factors, operational checkout and troubleshooting procedures may be combined into a single work package or may be developed in a separate operational checkout and a separate troubleshooting work package (Refer to 5.3.4.6.5).

a. Complexity of the system/equipment.

b. The type of test equipment used.

c. System/equipment self-test or BIT capability.

d. Complexity of the test and troubleshooting procedures as determined by the task analysis.

e. Clarity and usability.

5.3.4.6.3 Operational checkout work package **(page-based TMs only)** <**opcheckwp**>. Operational checkout procedures that subject an aircraft, or other type of major weapon system or their systems, subsystems, components, accessories, and items of equipment to prescribed conditions to determine that they will function in accordance with predetermined test parameters shall be developed. An operational checkout work package may include test set hookup and disconnect procedures, index of test set message words, a reference index of test set or BIT/BITE fault codes and related actions, and further testing procedures related to the message words and fault codes. The words **END OF WORK PACKAGE** shall be placed below the last item (i.e., text, illustration, etc.) in any work package containing the operational checkout procedures. The following information shall be included in the work package, as applicable.

a. Introduction <**intro**>. When required, an introduction shall be included explaining how the operational checkout procedures are to be used to perform testing and how they relate to the associated troubleshooting work packages.

b. General procedures and precautions <**proc**>. Any general procedures that must be performed prior to checkout and precautions that must be taken during the performance of the checkout procedure shall be included.

c. Pretest setup procedures <**hookup**>. Procedures for connecting any test and accessory equipment, including cable connections shall be included. Procedures for the initial setting of controls shall also be provided.

d. Operational checkout procedures <**opcheckproc**>. The selection of an operational checkout type shall be based on the type of system, equipment, or assembly/subassembly being addressed, the target audience, and the maintenance level of the operator/technician. Based on the complexity of the operational checkout to be performed, operational checkout procedures can be structured differently and therfore contain different content elements. The following methods shall be used to prepare operational checkout procedures. Once selected, the operational checkout method shall be prepared in accordance with the requirements outlined below.

(1) Operational checkout test procedure <**opcheck**>. Operational checkout procedures shall consist of a series of numbered steps and substeps <**testproc**>, which lead to an indication or condition <**indication**>. Based on the indications or conditions, a corrective action <**action**> is provided (Refer to figure 3). This corrective action can either be stated as a specific remedy or can be a reference <**xref**> to a detailed troubleshooting procedure work package. This process is continued until the complete operational checkout procedure is completed.

(2) Test set message word index <**messageindx**>. The message word index shall consist of a series of test set messages or bit-code words <**messageword**> with message word description <**para**>. Based on the message or bit-code word, a corrective **<action>** shall be stated. This corrective action can either be stated as a specific remedy or can be a reference **<xref**> to a detailed troubleshooting procedure work package.

(3) Fault code reference index <f**aultreports**>. The fault code reference index shall consist of fault code(s) <**messageword**> which leads to a corrective action **<action**>. This corrective action can either be stated as a specific remedy or can be a reference **<xref**> to a maintenance work package. If applicable, additional follow-on operational testing procedures **<follow-on**> shall be included based on the corrective action.

e. Post-operational shutdown procedures <**disconnect**>. Procedures to return the aircraft, aircraft system, or equipment to its normal configuration, prior to operational checkout setup, if required, shall be included.

5.3.4.6.4 Troubleshooting work package **(page-based TMs only) <tswp>**. Troubleshooting procedures for detecting, isolating, and correcting aircraft, aircraft systems or other types of weapon system, and their subsystems, and equipment failures and malfunctions shall be developed. Work packages will relate either to a specific symptom or to a system, assembly, or component. Work packages related to a system of some complexity may contain more than one set of troubleshooting procedures directed to specific subsystems. The following information shall be included in the work package, as applicable.

a. Introduction <**intro**>. When required, an introduction shall be included explaining how the troubleshooting procedures are to be used to perform troubleshooting and how they relate to the associated operational checkout work packages.

b. General procedures and precautions <**proc**>. Any general procedures that must be performed prior to troubleshooting and precautions that must be taken during the performance of the troubleshooting procedure shall be included.

c. Troubleshooting procedures <**tsproc**>. The selection of a troubleshooting type shall be based on the type of system, equipment or assembly/subassembly being addressed, the target audience description, and the maintenance level of the operator/technician. Based on the complexity of the troubleshooting to be performed, troubleshooting procedures can be structured differently and therefore contain different content elements. The following methods shall be used to prepare troubleshooting procedures. Once selected, the troubleshooting method shall be prepared in accordance with the requirements specified by this document.

(1) Method A - Text-Logic <**logicproc**>. Troubleshooting procedures for specific fault symptoms <**symptom**> shall combine text and logic and consist of a series of steps and substeps <**testproc**> which lead to an indication or condition <**indication**> (usually stated in the form of a question). Based on these indications or conditions, a “YES” or “NO” response <**answer**> is provided that will guide the technician to either the next step or a series of steps <**testproc**>, or to a malfunction <**malfunc**> and corrective action <**action**> (Refer to figure 4). This process is continued until the entire troubleshooting procedure is completed. When required, the corrective action may include a reference to the work package or paragraph <**xref**> that contains the data to perform the corrective action.

(2) Method B - Text <**faultproc**>. Troubleshooting procedures shall consist of an all inclusive series of specific fault symptoms for the system/equipment being troubleshot. For each fault symptom <**symptom**>, the probable malfunction or series of malfunctions <**malfunc**> that may have caused the fault shall be listed. For each probable malfunction identified, a corrective action <**action**> shall be stated with a reference to the work package or paragraph <**xref**> that contains the data to perform the corrective action (Refer to figure 5).

(3) Method C - Multiplex read codes <**muxproc**>. This method of troubleshooting is based on the use of computer generated multiplex (MUX) read code data. The MUX read code data are listed in troubleshooting sequence order by signal name. For each signal name <**signame**> the following MUX read code data shall be provided (Refer to figure 6).

(a) Memory location <**memloc**>

(b) Memory data bit(s) <**memdata**>

(c) Condition <**condition**>

(d) Signal function <**sigfunc**>

(e) Remarks <**remarks**>

(f) Pass <**criteria**>

(g) Fail <**criteria**>

The MUX read code data is used in conjunction with a malfunction/symptom index (Refer to 5.3.4.2.1) and an operational checkout procedure (Refer to 5.3.4.6.3 d.). For each system or equipment, the MUX read code data shall be listed under the system or equipment name <**sysname**> by the specific malfunction/symptom <**symptom**>.

d. Post-operational shutdown procedures <**disconnect**>. Procedures to return the aircraft, aircraft system, or equipment to its normal configuration, prior to troubleshooting setup, if required, shall be included.

5.3.4.6.5. Combined operational checkout and troubleshooting work package <**opcheck-tswp**>. Combined operational checkout and troubleshooting procedures to verify proper operation to prescribed standards and for detecting, isolating, and correcting system and equipment failures and malfunctions shall be developed. The following information shall be included, as applicable.

a. Introduction <**intro**>. When required, an introduction shall be included explaining how the operational checkout and troubleshooting procedures are to be used to perform checkout and troubleshooting and how they relate to the associated maintenance work packages that include the corrective actions that will return the equipment to proper operation.

b. General procedures and precautions <**proc**>. Any general procedures that must be performed prior to checkout and precautions that must be taken during the performance of the checkout procedure shall be included.

c. Pretest setup procedures <**hookup**>. Procedures for connecting any test and accessory equipment, including cable connections shall be included. Procedures for the initial setting of controls shall also be provided.

d. Operational checkout and troubleshooting procedures. Operational checkout and troubleshooting procedures may be combined in a single procedure or may be prepared as a separate operational checkout procedure and a separate troubleshooting procedure.

(1) Combined operational checkout and troubleshooting procedures <**opcheck-tsproc**>. Combined operational checkout and troubleshooting procedures <**opcheck-tsproc**> shall consist of a series of test procedures <**testproc**> (steps and substeps) which lead to an indication or condition <**indication**>. When a normal indication is obtained, the operational checkout continues until the complete checkout is completed or until an abnormal condition or indication is observed. When the test procedure results in an abnormal indication or condition, a malfunction <**malfunc**> or a series of malfunctions is provided. For each malfunction, the possible corrective actions <**action**> shall be provided (Refer to figure 7). When required, the corrective action may include a reference to the work package or paragraph <**xref**> that contains the data to perform the corrective action.

(2) Separate operational checkout procedures <**opcheckproc**>. When it is determined that the operational checkout procedures shall be separate from the troubleshooting procedures, the operational checkout procedures shall be included under the heading “OPERATIONAL CHECKOUT”. Operational checkout procedures shall be developed in accordance with 5.3.4.6.3 d.

(3) Separate troubleshooting procedure <**tsproc**>. When it is determined that the troubleshooting procedures shall be separate from the operational checkout procedures, the troubleshooting procedures shall be included under the heading "TROUBLESHOOTING". Troubleshooting procedures shall be developed in accordance with 5.3.4.6.4 c.

e. Post-operational shutdown procedures <**disconnect**>. Procedures to return the aircraft, aircraft system, or equipment to its normal configuration, prior to operational checkout or troubleshooting setup, if required, shall be included.

5.3.4.6.6 Integrated system troubleshooting procedures work packages. When specified by the acquiring activity, integrated system operational checkout and troubleshooting (refer to 5.1.2.2) shall be developed. Troubleshooting procedures which involve more than one system or more than one major subsystem and which cannot be logically placed in one of the individual system/subsystem troubleshooting information work packages shall be covered in this type of work package. The content and structure of this work package shall be as described in 5.3.4.6.3 and 5.3.4.6.4 or 5.3.4.6.5.

6. **NOTES**.

The notes in section 6 of MIL-STD-40051A apply to this Part.

PRESHOP ANALYSIS
FOR
P/N _ _ _ _ _

Serial No. _ _ _ _ _ _ _
NSN _ _ _ _ _ _ _ _ _ _ _ _ _ _ _ _ _ _

MWOs Required _

Reason(s) for Overhaul/Repair _____
_____
_____
_____
_____

Unpacking Secondary Items Required ? _ _ _ _
Reviewed Tags ? _ _ _ _
Reviewed Forms ? _ _ _

Name (please print) _ _ _ _ _ _ _ _ _ _ _ _ _ _ _ _ _ _
Signature _ _ _ _ _ _ _ _ _ _ _ _ Date _ _ _ _ _ _

FIGURE 1. Example of a cover sheet/frame for preshop analysis checklist.

Scope

This work package includes a list which is to be copied for each item received for a preshop analysis. After copying one list for each item, the information required must be completed on the checklist prior to the preshop analysis.

COMPONENT CHECKLIST

Name/nomenclature of the equipment/item_____.

Serial number_____.

Date received_____.

Received from (identify unit)_____.

Component name_____.

NSN_____.

Part number_____.

Quantity required_____.

Quantity received_____.

Visual damage found_____.

FIGURE 2. Example of a component checklist.

ARRESTING GEAR SYSTEM OPERATIONAL CHECKOUT

PROCEDURE

STEP

1. Make sure door 103 is installed (A1-F18AC-LMM-010).
2. Make sure arresting HOOK manual control lever is set to up.
3. Read, record and reset nose wheelwell DDI (A1-F18AC-LMM-000).

INDICATION/CONDITION

No maintenance code exists.

CORRECTIVE ACTION

Perform troubleshooting (WP 0010 03. Maintenance Code 916).

STEP

4. If arresting hook is not up, manually raise and latch arresting hook.

INDICATION/CONDITION

Arresting hook latches in up position.

CORRECTIVE ACTION

Do arresting hook push-pull control assembly rigging or replace push-pull control assembly (A1-F18AC-130-300).

FIGURE 3. Example of content for an operational checkout procedure.

TROUBLESHOOTING PROCEDURE

916 Code Displayed with Arresting Hook Actuator Properly Serviced

PROCEDURE

CAUTION

To prevent damage to low level devices (switches/relay contacts), do not test for continuity with multimeter on the RX1 scale. Pin to pin tests that do not go through switches/relay contacts may use RX1 scale.

NOTE

The question used in logic tree "Does continuity exist" means to test for the items listed below:

1. Pin to pin test per procedural step.
2. Shorts to ground.
3. Shorts between surrounding pins on connectors.
4. Shorts between shield and conductors.
5. Shield continuity.

When testing for resistance, also test for shorts to ground.

STEP

1. Do substeps below:
   a. Make sure arresting hook is up and latched.
   b. Open door 32R (A1-F18AC-LMM-010).
   c. Disconnect 85P-N002C from signal Data Converter CV-3493/ASM-612.

CONDITION/INDICATION

Does continuity exist between 85P-N002C pin 32 and aircraft ground?

DECISION

No-2 Yes-5

STEP

2. Do substeps below:
   a. Manually raise speed brake and install speed brake aircraft ground safety lock (A1-F18 AC-PCM-000).
   b. Remove door 103 (A1-F18AC-LMM-010)
   c. Disconnect 19P-T012 from temperature compensation pressure switch.

INDICATION/CONDITION

Does continuity exist between 19J-T012 pins 3 and 4.

DECISION

No-7 Yes-3

MALFUNCTION

3. Faulty temperature compensation pressure switch.

ACTION

Replace (A1-F18AC-130-300), and do step 16.

FIGURE 4. Example of content for a troubleshooting procedure (Method A).

TROUBLESHOOTING PROCEDURE

NO START (GAS GENERATOR TURNING)

SYMPTOM

No fuel flow or fuel pressure

MALFUNCTION

No fuel in tanks.

CORRECTIVE ACTION

Check tanks for fuel quantity. Refill if necessary with turbine aviation fuel JP-4 or JP-5 MIL-T-5624 or JP-8 MIL-T-83133

Main fuel inlet line

CORRECTIVE ACTION

Inspect main fuel inlet connection. Reconnect main fuel-in line.

No fuel to engine

CORRECTIVE ACTION

1. Be sure speed control shaft moves away from stopcock when the speed control lever is advanced. Repair speed control lever linkage (WP 089 00).

2. Be sure fuel valves are not shut off. Turn on valves.

SYMPTOM

Fuel or ignition problems: Speed control lever at IDLE, Ng of 3646-4010 rpm (20-22%) and fuel flow of 100-130 lb/hr.

MALFUNCTION

Fuel manifold drain stuck open.

CORRECTIVE ACTION

Check for fuel draining from fuel flow divider valve during start. Replace fuel flow divider, if fuel leakage continues during motoring (WP 019 00).

Faulty igniter plug.

CORRECTIVE ACTION

Check both igniter plugs for audible ignition. Replace faulty igniter plug(s) (WP 020 00).

FIGURE 5. Example of content for a troubleshooting procedure (Method B).

RANGE DATA CANNOT BE DISPLAYED - Continued

23. **SIGNAL NAME:** DASEC STATUS WORD DC ANALOG OUTPUT BIT
MEMORY LOCATION: 002150
MEMORY DATA BIT(S): 15 (BINARY)
CONDITION: (None)
SIGNAL FUNCTION: Indicates status of DC analog circuits.
REMARKS: From DASEC to FCC.
PASS: If second digit displayed on HOD is 3 or 7, go to step 24.
FAIL: Location of fault: replace DASEC (TM 1-1520-238-23 Series).

24. **SIGNAL NAME:** DASEC STATUS WORD AD/DA BIT
MEMORY LOCATION: 002150
MEMORY DATA BIT(S): 13 (BINARY)
CONDITION: (None)
SIGNAL FUNCTION: Indicates status of analog-to-digital and digital-to-analog circuits.
REMARKS: From DASEC to FCC.
PASS: If third digit displayed on HOD is 1, 3, 5, or 7, go to step 25.
FAIL: Location of fault: replace DASEC (TM 1-1520-238-23 Series).

25. **SIGNAL NAME:** DASEC STATUS WORD FD/LS TEST
MEMORY LOCATION: 002150
MEMORY DATA BIT(S): 12 (BINARY)
CONDITION: (None)
SIGNAL FUNCTION: Indicates FD/LS ground test is being run.
REMARKS: From DASEC to FCC.
PASS: If third digit displayed on HOD is 1 or 5, go to step 26.
FAIL: Location of fault: replace DASEC (TM 1-1520-238-23 Series).

26. **SIGNAL NAME:** DASEC STATUS WORD ASE BIT
MEMORY LOCATION: 002150
MEMORY DATA BIT(S): 11 (BINARY)
CONDITION: (None)
SIGNAL FUNCTION: Indicates last FD/LS test ASE bit status.
REMARKS: From DASEC to FCC.
PASS: If third digit displayed on HOD is 1, go to step 27.
FAIL: Location of fault: replace DASEC (TM 1-1520-238-23 Series).

FIGURE 6. Example of content for a troubleshooting procedure (Method C).

OPERATIONAL CHECKOUT AND TROUBLESHOOTING PROCEDURE

Computer Processor Operational Checkout and Troubleshooting

TEST PROCEDURE

1. Remove computer processor top cover (WP 0005 00).

2. Apply power to test set and place test set POWER switch to ON position.

INDICATION/CONDITION

Test set power indicator is illuminated.

MALFUNCTION/CORRECTIVE ACTION

If power indicator does not light, check power source for 28 VDC.

TEST PROCEDURE

3. Place UUT POWER switch in CP position.

INDICATION/CONDITION

CP LEDS momentarily flash.

MALFUNCTION/CORRECTIVE ACTION

If LEDS do not flash briefly, check test set wiring.

TEST PROCEDURE

4. Place Test Set UUT POWER switch in CP position. Quickly press and release the CP BIT button on the system interface card. Observe the 10 LEDs on the system I/F CCA.

INDICATION/CONDITION

BIT test routine runs for 30 seconds. During the first 15 seconds the CP LEDs (DS1-DS10) will flash. The second 15 second period is the status reporting period. All LEDs are OFF during the second 15 second period. After the BIT routine is complete, all LEDs will return to the original OFF state.

MALFUNCTION/CORRECTIVE ACTION

a. If DS1 is illuminated, perform DS1 testing. Refer to table 2.
b. If DS2 is illuminated, perform DS2 testing. Refer to table 3.

FIGURE 7. Example of content for a combination testing and troubleshooting procedure.

NOT MEASUREMENT SENSITIVE

MIL-STD-40051-4A(TM)
2 March 1999

DEPARTMENT OF DEFENSE STANDARD PRACTICE

TECHNICAL MANUALS

MAINTENANCE INSTRUCTIONS

CONTENTS

PARAGRAPH PAGE

1. **SCOPE** 1
   1.1 Scope 1

2. **APPLICABLE DOCUMENTS** 1

3. **DEFINITIONS** 1

4. **GENERAL REQUIREMENTS** 1
   4.1 General 1
   4.2 Development of maintenance instructions 1
   4.3 Maintenance level applicability 1
   4.4 Depot maintenance work requirements 1
   4.5 Preparation of digital data for electronic delivery 1
   4.6 Use of the DTDs / FOSIs 2
   4.6.1 Page-based TMs 2
   4.6.2 Frame-based TMs 2
   4.7 Content structure and format 2
   4.8 Style and format 2
   4.9 Work package development 2
   4.10 Safety devices and interlocks 2
   4.11 Electrostatic discharge (ESD) sensitive parts 2
   4.12 Nuclear hardness 2
   4.13 Selective application and tailoring 2

5. **DETAILED REQUIREMENTS** 3
   5.1 Preparation of maintenance instructions 3
   5.2 Types of maintenance 3
   5.3 Maintenance work packages 3
   5.3.1 Work package content 3
   5.3.2 Work package identification information 4
   5.3.3 Initial setup information 4
   5.3.4 Types of maintenance work packages 6
   5.3.4.1 Service upon receipt work package 6
   5.3.4.1.1 Siting 6
   5.3.4.1.2 Shelter requirements 7
   5.3.4.1.3 Service upon receipt of materiel 7
   5.3.4.1.4 Installation instructions 8
   5.3.4.1.4.1 Assembly of equipment 9
   5.3.4.1.4.2 Installation of the equipment 9
   5.3.4.1.4.3 Special applications 10
   5.3.4.1.4.4 Van and shelter installations 10
   5.3.4.1.5 Preliminary servicing of equipment 10
   5.3.4.1.6 Preliminary checks and adjustment of equipment 10
   5.3.4.1.7 Preliminary calibration of equipment 11
   5.3.4.1.8 Circuit alignment 11
   5.3.4.1.9 Ammunition markings 12
   5.3.4.1.10 Classification of defects 12

CONTENTS

PARAGRAPH		PAGE
5.3.4.1.11	Handling	12
5.3.4.1.12	Procedures needed to activate ammunition, mine, etc	12
5.3.4.2	Equipment / user fitting instructions work package	12
5.3.4.3	Preventive maintenance checks and services (PMCS), including lubrication instructions. **(not required for aircraft TMs)**	12
5.3.4.3.1	PMCS introduction WP	12
5.3.4.3.2	PMCS work package	14
5.3.4.3.2.1	PMCS procedures.	14
5.3.4.3.2.1.1	PMCS data preparation	14
5.3.4.3.2.1.2	Mandatory replacement parts	17
5.3.4.3.3	Preventive Maintenance Checklist (PMC) **(operator only)**	17
5.3.4.4	Preventive maintenance inspections work package **(aircraft only)**	17
5.3.4.4.1	General information and introduction **(aircraft only)**	17
5.3.4.4.2	Standards of serviceability **(aircraft only)**	17
5.3.4.4.3	Special inspections **(aircraft only)**	17
5.3.4.5	Aircraft lubrication instructions work package **(aircraft only)**	18
5.3.4.5.1	Lubrication instructions **(aircraft only)**	18
5.3.4.5.2	Lubrication charts **(aircraft only)**	18
5.3.4.6	Ammunition maintenance work package	19
5.3.4.7	Auxiliary equipment maintenance work package	19
5.3.4.8	Facilities work package **(DMWR only)**	19
5.3.4.9	Maintenance work packages	19
5.3.4.9.1	Maintenance tasks	20
5.3.4.9.1.1	Maintenance task requirements	21
5.3.4.9.1.2	Assembly and preparation for use **(aviation only)**	22
5.3.4.9.1.3	Servicing	22
5.3.4.9.1.4	Ground handling	23
5.3.4.9.1.5	Inspection of installed items	23
5.3.4.9.1.6	Removal	23
5.3.4.9.1.7	Disassembly	23
5.3.4.9.1.8	Cleaning	24
5.3.4.9.1.9	Inspection-acceptance and rejection criteria	24
5.3.4.9.1.10	Nondestructive Testing Inspection (NDTI)	24
5.3.4.9.1.11	Repair or replacement	25
5.3.4.9.1.12	Alignment	25
5.3.4.9.1.13	Painting	25
5.3.4.9.1.14	Lubrication	25
5.3.4.9.1.15	Assembly	25
5.3.4.9.1.16	Test and inspection	26
5.3.4.9.1.16.1	Inspection and test of conventional and chemical ammunition or components containing radioactive materials **(-30, -40, and AVIM only)**	26
5.3.4.9.1.16.2	Pre-embarkation inspection of material in units alerted for overseas movement	27
5.3.4.9.1.17	Installation	27
5.3.4.9.1.18	Adjustment	27
5.3.4.8.1.19	Calibration	27
5.3.4.9.1.20	Radio interference suppression	28
5.3.4.9.1.21	Placing in service	28

CONTENTS

PARAGRAPH		PAGE
5.3.4.9.1.22	Testing	28
5.3.4.9.1.23	Preservation, packaging, and marking **(DMWR only)**	29
5.3.4.9.1.24	Overhaul and retirement schedule **(aircraft only)**	29
5.3.4.9.1.25	Preparation for storage or shipment	30
5.3.4.9.1.26	Classification of defects	30
5.3.4.9.1.27	Handling ammunition	30
5.3.4.9.1.28	Ammunition markings	31
5.3.4.9.1.29	Procedures needed to activate ammunition, mine, etc.	31
5.3.4.10	General maintenance work packages	31
5.3.4.11	Phased maintenance inspection work package **(aircraft phased maintenance checklist only)**	31
5.3.4.11.1	Inspection area diagrams	31
5.3.4.11.2	Phased maintenance checklist	31
5.3.4.11.3	MTF form and rotor smoothing record	32
5.3.4.11.4	Final records check	33
5.3.4.11.5	Signature sheet	33
5.3.4.12	Preventive maintenance services inspection work packages **(aircraft only)**	33
5.3.4.12.1	Mandatory safety-of-flight inspection items	34
5.3.4.12.2	Area diagram	34
5.3.4.12.3	Standard checklist statements	34
5.3.4.13	Overhaul inspection procedures (OIP) work package **(DMWR only)**	36
5.3.4.14	Illustrated list of manufactured items work package **(-20/AVUM level or above only)**	36
5.3.5.14.1	Introduction for illustrated list of manufactured items work package **(-20/AVUM level or above only)**	36
5.3.4.14.2	Index of manufactured items	37
5.3.4.14.3	Illustrations of manufactured items	37
5.3.4.15	Torque limits work package **(-20/AVUM level or above only)**	37
5.3.4.16	Ammunition marking information work package	37
5.3.4.17	Foreign ammunition (NATO) work package	38
5.3.4.18	Aircraft inventory master guide work package **(aircraft only)**	38
5.3.4.18.1	Introduction	38
5.3.4.18.2	Security	38
5.3.4.18.3	Inventoriable items	38
5.3.4.18.4	Periods of inventory	39
5.3.4.19	Storage of aircraft work package **(aircraft only)**	39
5.3.4.19.1	General information for storage of aircraft work package **(aircraft only)**	39
5.3.4.19.2	Flyable storage, short term storage, and intermediate storage	39
5.3.4.20	Weighing and loading (AVIM) work package **(aircraft only)**	40
5.3.4.20.1	General information	40
5.3.4.20.2	Weighing information	40
5.3.4.20.3	Loading information	40
5.3.4.21	Depot mobilization requirements work package **(DMWR only)**	40
5.3.4.21.1	Introduction for depot mobilization requirements work package **(DMWR only)**	41
5.3.4.21.2	Mobilization requirements	41
5.3.4.22	QA requirements work package **(DMWR only)**	41

CONTENTS

PARAGRAPH PAGE

5.3.4.22.1 Statement of responsibility 41
5.3.4.22.2 Definitions 41
5.3.4.22.3 Special requirements for inspection tools and equipment 41
5.3.4.22.4 Certification requirements 41
5.3.4.22.5 In-process inspections 42
5.3.4.22.6 Acceptance inspections 42
5.3.4.22.7 First article inspection 42
5.3.4.23 Wiring diagrams work package 42
5.3.4.23.1 Introduction 42
5.3.4.23.2 Wire identification 42
5.3.4.23.3 Abbreviations 42
5.3.4.23.4 Wiring diagrams 42

6. **NOTES** 42

FIGURE

1. Example of a PMCS mandatory replacement parts list 43
2. Example of a lubrication chart 44
3. Example of tabular and narrative reliability, availability, and maintainability data. 45
4. Example of an OIP table. 46
5. Example of a classification of material defect table. 47
6. Example of an overhaul and retirement schedule. 48
7. Example of an inspection area diagram 49
8. Example of inspection access provisions 50
9. Example of preventive maintenance services 52
10. Example of an area diagram 53
11. Example of an illustrated list of manufactured items 54
12. Example of torque limits data 55
13. Example of an aircraft weighing record DD Form 365-2 56
14. Example of a two view chart diagram 58
15. Example of depot mobilization requirements 59

1. SCOPE.

1.1 Scope. This standard establishes the technical content requirements for the preparation of maintenance procedures for major weapon systems, and their related systems, subsystems, equipment, weapons replacement assemblies (WRAs), and shop replacement assemblies (SRAs). The requirements are applicable for all maintenance levels through overhaul (depot) including Depot Maintenance Work Requirements (DMWRs). The requirements can be used to develop TMs in a variety of output forms including interactive screen presentations (frame-based manuals) and paper paged-based manuals.

2. APPLICABLE DOCUMENTS.

The applicable documents in section 2 of MIL-STD-40051A apply to this Part.

3. DEFINITIONS.

The definitions in section 3 of MIL-STD-40051A apply to this Part.

4. GENERAL REQUIREMENTS.

4.1 General. Maintenance instructions shall be prepared for major weapon systems, equipment, components and applicable support and interface equipment. Maintenance procedures and supporting illustrations shall be prepared so that maintenance personnel can perform all required operator through depot level (overhaul) maintenance.

4.2 Development of maintenance instructions. Maintenance instructions shall be prepared for all items comprising the weapon system/equipment, such as assemblies, subassemblies, components, wiring, junction boxes, and accessories. Tasks shall be presented in the order in which they are performed. Sound engineering principles and techniques, approved Logistics Support Analysis (LSA) or Logistics Management Information (LMI), service experience, performance data on similar equipment, and all other reliability, maintainability, and supportability (RMS) and operational availability (Ao) data available shall be used in the preparation of specific maintenance instructions.

4.3 Maintenance level applicability. Requirements contained in this standard are applicable to all maintenance levels unless specifically noted in bold and in parentheses (i.e., **-Direct Support**). The labeled requirements shall be applicable to all TMs containing that maintenance level. An explanation of all applicable Department of Army maintenance levels is provided in MIL-STD-40051A, Appendix A.

4.4 Depot maintenance work requirements. When the contracting activity specifies that a Depot Maintenance Work Requirement (DMWR) shall be prepared to the best commercial practices, the depot requirements contained in this standard shall be used only as a guide, therefore, the conforming modular DTD for maintenance instructions cannot be used.

4.5 Preparation of digital data for electronic delivery. Technical manual data prepared and delivered digitally in accordance with this standard shall be Standard Generalized Markup Language (SGML) tagged using the Document Type Definition (DTD) for Maintenance Instructions and the Formatting Output Specification Instance (FOSI) or style sheets in accordance with MIL-STD-2361. Refer to MIL-STD-40051A (paragraph 4.6) for information on obtaining or accessing this DTD. SGML tags used in the modular DTD are noted throughout the text of this standard in bracketed, bold characters (i.e., <**maintwp**>) as a convenience for the TM author and to ensure that the tags are used correctly when developing a document instance.

REPRINTED WITHOUT CHANGE

4.6 Use of the DTDs / FOSIs.

4.6.1 Page-based TMs. The DTDs referenced in this standard interpret the technical content and structure for the functional requirements contained in this standard and are mandatory for use. The FOSIs referenced herein interpret the style and format. As specified by the contracting activity, FOSIs or style sheets may be used to produce final reproducible paper copy for all TMs prepared in accordance with this standard. For additional information on DTDs and specific FOSIs, refer to MIL-STD-2361.

4.6.2 Frame-based TMs. The DTD referenced in this standard interprets the technical content and structure for the functional requirements contained in this standard and is mandatory for use. Development of frame-based TMs is accomplished through the use of the DTD combined with the requirements contained in MIL-PRF-87268. The requirements contained in MIL-PRF-87268 apply unless they conflict with the requirements in this standard. The requirements in this standard take precedence over the requirements contained in MIL-PRF-87268. A FOSI or style sheet is used to interpret the style and format for frame-based screen display. For additional information on DTDs and specific FOSIs or style sheets, refer to MIL-STD-2361.

4.7 Content structure and format. The examples provided herein and in MIL-STD-40051A are an accurate representation of the content structure and format requirements contained in this Part and shall be followed to permit the effective use of the DTD for Maintenance Instructions.

4.8 Style and format. MIL-STD-40051A provides style and format requirements for the preparation of both page-based and frame-based TMs. These requirements are considered mandatory and are intended for compliance.

4.9 Work package development. Technical manual data developed in accordance with this standard shall be divided into individual, stand alone units of information called work packages. A work package shall consist of descriptive, operational, maintenance, troubleshooting, support, or parts information for the weapon system or equipment.

4.10 Safety devices and interlocks. Information shall be prepared pertaining to the purpose and location of all safety devices and interlocks in conjunction with the pertinent procedures.

4.11 Electrostatic discharge (ESD) sensitive parts. If the equipment contains ESD sensitive parts, components, or circuits, cautions and ESD labels shall be incorporated into the applicable tasks and procedures to ensure ESD sensitive parts are not damaged or degraded during Maintenance and operation. Refer to MIL-STD-40051A for requirements on labeling with ESD. Actions which could damage ESD sensitive parts, but which are not directly related to handling or operation of ESD sensitive parts, shall not be annotated with the ESD acronym, but shall be preceded by a caution statement.

4.12 Nuclear hardness. If the weapon system/equipment has nuclear survivability requirements (for example, over pressure and burst, thermal radiation, electromagnetic pulse, or transient radiation effects on electronics), cautions and Hardness-Critical Processes (HCP) labels shall be incorporated into the applicable tasks and procedures to ensure the hardness of the equipment is not degraded during handling or operation. Refer to MIL-STD-40051A for requirements on labeling with HCP. Actions which could degrade hardness, but which are not directly involved in establishing nuclear hardness, shall not be annotated with the acronym, but shall be preceded by a caution statement.

4.13 Selective application and tailoring. MIL-STD-40051A contains some requirements that may not be applicable to the preparation of all technical manuals. Selective application and tailoring of requirements contained in MIL-STD-40051A are the responsibility of the acquiring activity and shall be accomplished using Appendix A, Technical Manual Content Selection Matrixes, of MIL-STD-40051A.

SUPERSEDES PAGE 2 OF MIL-STD-40051-4A

5. **DETAILED REQUIREMENTS.**

5.1 Preparation of maintenance instructions. Maintenance instructions shall be prepared and subdivided into individual work packages that provide maintenance information to enable a technician to receive, process, inspect, clean, service, test and repair the weapon system/equipment and associated weapons replacement assemblies/shop replacement assemblies (WRAs/SRAs) to an acceptable performance standard. Maintenance tasks shall be developed in accordance with the LSA/LMI, Maintenance Allocation Chart (MAC) or Maintenance Plan, and the Source, Maintenance, and Recoverability (SMR) codes developed for the weapon system/equipment and components. Maintenance work packages shall be arranged to coincide with the Functional Group Code (FGC) sequence followed in the MAC or Repair Parts and Special Tools List (RPSTL).

5.2 Types of maintenance. Depending on the type and complexity of the weapon system/equipment, the TM may contain the following maintenance categories.

a. Weapon system/equipment maintenance. <**maintsk**>

b. Component maintenance. <**maintsk**>

c. Assembly maintenance. <**maintsk**>

d. Subassembly maintenance. <**maintsk**>

e. Auxiliary equipment maintenance. <**auxeqwp**>

f. Software maintenance. <**maintsk**>

g. Ammunition maintenance. <**ammowp**>

h.. Preventive maintenance services (**aircraft only**). <**pms-inspecwp**>

i. Phased maintenance inspections **(aircraft phased maintenance checklist only)** <**pmi-cklistwp**>

5.3 Maintenance work packages. Individual maintenance work packages shall be developed for the overall weapon system/equipment and each maintainable system, subsystem, and WRA/SRA for each applicable maintenance level as indicated in the approved MAC or maintenance plan.

5.3.1 Work package content. Work packages shall include WP identification information, initial setup information, and all maintenance tasks, such as remove, inspect, service, test, install, replace, disassemble, assemble, repair, clean, adjust, align, etc. When initial setup information differs for specific maintenance tasks, additional work packages shall be developed. Work packages shall stand-alone and contain complete start-to-finish maintenance procedures. The words "END OF WORK PACKAGE" shall be placed below the last data item (i.e., text, illustration, etc.) of the work package containing the maintenance procedure. The maintenance work packages described in 5.3.4.1 through 5.3.4.22 shall be prepared, as applicable.

SUPERSEDES PAGE 3 OF MIL-STD-40051-4A

5.3.2 Work package identification information. All work packages shall include the identification information entries in the following sequential order, as applicable .

a. Maintenance levels <**maintlvl**>. The maintenance level(s) shall be included (i.e., Direct support maintenance).

b. End item nomenclature <**eicnomen**>. The nomenclature of the end item <**name**> and the system, subsystem, equipment or component name <**sysnomen**> covered in the WP (including AN type designation, if applicable) shall follow the applicable maintenance level. When applicable, the NSN **<nsn>**, model(s) <**modelno**>, and part number(s) <**partno**> should be placed below the nomenclature. When the WP covers more than one model and/or part number, all models and/or part numbers shall be listed.

c. WP title **<title>**. All maintenance tasks that are included in an individual work package shall be listed (i.e., "Removal, Cleaning, Inspection, Installation" or "Disassembly, Reassembly) in the title.

d. Effectivity notice <**appconfig**>. If applicable, an effectivity notice shall be included. When the work package does not apply to all configurations of the weapon system/equipment, the applicable configurations **<name>** covered by the work package shall be listed. Omit this requirement if the same tasks/procedures apply to all configurations. (If certain configurations require different tasks/procedures, separate work packages shall be prepared.)

e. Supersedure notice <**wpsupersede**>. If applicable, a supersedure notice shall be placed below the effectivity notice. If the WP supersedes a WP in the same manual, the supersedure notice shall be as follows: "This WP supersedes (WP number), (dated)." If the superseded WP is contained in another manual, the notice shall include the publication number as follows: "This WP supersedes (WP number), (dated), contained in TM X-XXXX-XXX-20." If an unclassified or classified WP supersedes a classified WP, the notice shall be as follows: "This WP supersedes (WP number), (dated), which should be destroyed in accordance with applicable security regulations."

f. Joint use. When TMs are acquired and specified by the Army for joint use with another or other Services (Joint Service TMs), work packages in joint publications which do not apply to all Services concerned shall be marked to indicate the Services to which they apply (for example, LANDING GEAR MAINTENANCE (ARMY ONLY)). For **IETMs**, this data need not be displayed on the user's EDS.

5.3.3 Initial setup information **<wpinfo>**. Initial setup information shall be included in each work package and shall immediately follow the WP identification information. It provides the maintenance technician with general information, equipment, parts, material, and authorized personnel required to perform and complete all the maintenance tasks included in the work package. Setup information requirements are described below.

a. Test equipment **<testeqp>**. All test equipment required to perform the procedure shall be listed by, as a minimum, name **<name>** and part **<partno>** or model number **<modelno>** designation, as a part of the identification number <**identno**>. For **page-based** manuals, test equipment shall be listed by **<name>**, item number, and WP number <**xref**> if a separate WP has been developed containing an overall listing of test equipment for the system or equipment. This will eliminate the need to repeat the part and model numbers throughout the TM.

b. Tools and special tools **<tools>**. The tool kit (box) assigned to the mechanic (on a 1-per-mechanic-by-MOS basis) to be used in maintenance of a particular equipment shall be listed by, as a minimum, name **<name>**, tool kit number (**<partno>** or **<nsn>**), supply catalog (SC) **<sc>**, or TM number **<tmno>**. No tool in the kit shall be further identified. Other tools required for performance of all tasks for the maintenance levels covered in the work package shall also be identified in the initial setup. "Other tools" includes tools which are part of/components of shop sets authorized to sections/teams; tools authorized by RPSTL and CTA-50-970; special and fabricated tools; and items of Test, Measurement and Diagnostic Equipment (TMDE). For **page-based** manuals, if a separate WP has been developed containing an overall listing of tools and special tools, the tools and special tools shall be listed by name **<name>**, item number, and WP number <**xref**>. This will eliminate the need to repeat the part and model numbers throughout the TM.

c. Materials/parts **<mtrlpart>**. All expendable items and support materials, mandatory parts and flight safety critical aircraft parts shall be listed by, as a minimum, name **<name>**, part number **<partno>**, if any, and quantity <**qty**>, if applicable. The item number and supporting information work package **<xref>** which lists these items shall be given. For **page-based** manuals, if a separate WP has been developed containing an overall listing of materials/parts, the materials/parts shall be listed by name **<name>**, item number, and WP number <**xref**>. This will eliminate the need to repeat the part and numbers throughout the TM. For examples, see Part 2, page 4a, para 5.2.3.3.1c.

d. Personnel required **<persnreq>**. Personnel **<name>** and the number of personnel **<qty>** shall be identified if the task requires more than one. The Military Occupational Specialty (MOS) designation **<nameid>** is not necessary, but it may be included. For example,

Personnel Required
Artillery Mechanic 68M10 (1)
Artillery Mechanic 66J30 (1)

e. References **<ref>**. Other work packages, TMs, foldouts and other sources (**<extref>**/**<xref>**) that are needed to complete the maintenance tasks shall be listed here. Only references not listed in equipment conditions shall be listed. For example,

References
TM 9-1015-252-20&P
WP 0100 00

f. Equipment conditions **<eqpconds>**. Any special equipment conditions required before the procedure can be started shall be listed here and cross-referenced to the appropriate source (**<extref>** or **<xref>**) for setting up the condition **<condition>**. For example,

Equipment Condition
Firing mechanism removed (WP 0010 00)

g. Special environmental conditions **<specenv>**. Any special environmental conditions (such as ventilation, lighting, or temperature) **<condition>** that are required shall be listed here. The reason **<reason>** that such conditions are needed shall be explained. For example,

Special Environmental Condition
Darkened area required for testing lights.

h. Drawings required <**dwgreq**>. All drawings (which are not included in the work package) required to complete the maintenance tasks shall be listed here. Drawings shall be listed by title <**dwgname**> and drawing number <**dwgno**>. For example,

Drawings Required
Power Supply Schematic (132E470092)

i. Estimated time to complete the task <**time.to.comp**>. If required by the acquiring activity, the estimated time it will take to complete the operating task shall be included. Approved Logistics Support Analysis (LSA) or Logistics Management Information (LMI), and service experience, performance data on similar equipment, and all other reliability, availability, and maintainability (RAM) data available shall be used to estimate the time required to complete the task.

5.3.4 Types of maintenance work packages.

5.3.4.1 Service upon receipt work package <**surwp**>.

a. This work package shall contain information required for the user to ensure that the equipment will be adequately inspected, serviced, and operationally tested before it is subjected to use <**geninfo**>.

b. Procedures shall be prepared for performing visual inspection of ammunition received from the ammunition supply facility. This inspection shall include verification that ammunition received was that requisitioned. Instructions shall be prepared for a condition check of the shipment (pallets, containers, boxes, and legibility of markings). Instructions shall be prepared to note the quantity of each lot for recording purposes.

c. For equipment that requires extensive service upon receipt, this work package shall be further subdivided into the following tasks <**surtsk**> described in 5.3.4.1.1 through 5.3.4.1.12.

5.3.4.1.1 Siting <**siting**>. Siting instructions peculiar to the equipment shall be prepared, as applicable. In preparing the instructions, operational and maintenance features shall be considered, such as the following:

a. Location.

b. Proximity to power sources.

c. Effective ranges.

d. Terrain requirements to avoid screening, reflections, ground clutter, and other poor operational conditions due to terrain.

e. Technical requirements.

f. Shelter locations.

g. Compensating for adverse siting conditions.

h. When the equipment contains large components such as towers and antennas that require orientation to a baseline during siting.

i. Mobile equipment oriented during installation.

5.3.4.1.2 Shelter requirements <**shltr**>. For equipment normally housed in a permanent or semipermanent shelter (other than a military truck, van, or transportable shelter) during use, the following information shall be prepared.

a. Amount of floor, wall, and height space required.

b. A plan for a typical layout.

c. Required weight capacity of the building floor.

d. Dimensions required for installed equipment.

e. Total weights that the floor must support and the area in square feet over which the total weight will be distributed.

f. Environmental conditions (e.g., venting).

g. Power requirements.

h. Unusual requirements specific to equipment, such as air-conditioning.

i. Architectural and engineering data on beam sizes, lengths, bending moments, and required supports shall not be included.

5.3.4.1.3 Service upon receipt of materiel <**surmat**>. The following instructions shall be prepared.

a. Unpacking <**unpack**>. As a minimum, the following information shall be prepared.

(1) Any special sequence of action necessary to protect the equipment.

(2) If a special design reusable container is involved for either the end item or components which are authorized for replacement, instructions shall be prepared to report or reenter the empty container through supply channels. Instructions shall be prepared on how to package the unserviceable component in the empty container in the same manner that the new component was packaged if a component is being replaced.

(3) Man-hour requirements and total man-hours required for unpacking the equipment.

b. Checking unpacked equipment <**chkeqp**>. Instructions shall be prepared for a condition check of the shipment (including that of pallets, containers, boxes, and legibility of markings). The following data shall be included. For **page-based TMs**, these instructions may be contained in **standard tables**.

(1) Packaging material <**crit.insp.tab**>. For each item <**eqpitem**> of a component <**comppnt-assem**> requiring inspection, acceptable <**accept**>, reparable <**repairable**>, and nonreparable <**nonrepairable**> conditions shall be provided.

(2) Equipment components <**pecul.insp.tab**>. For each item <**eqpitem**> of a component <**compnt-assem**> requiring inspection, an action <**actionreq**> shall be provided. If applicable, the action may reference another work package <**xref**>.

In addition, the following shall be inserted exactly as stated here.

"Inspect the equipment for damage incurred during shipment. If the equipment has been damaged, report the damage on SF 361, Transportation Discrepancy Report.

Check the equipment against the packing slip to see if the shipment is complete. Report all discrepancies in accordance with applicable service instructions (e.g., for Army instructions, see DA PAM 738-750).

Check to see whether the equipment has been modified."

c. Processing unpacked equipment **<processeqp>**. Instructions shall be prepared for processing the unpacked equipment (e.g., removing excess lubricant from a new rifle), as long as they do not conflict with any warranty provisions. The following information shall be prepared, as applicable.

(1) Any special skills required by processing personnel.

(2) All caustic, corrosive, and/or toxic material used during processing shall be identified and applicable warnings and cautions given.

(3) Instructions on safe disposal of waste products generated during processing actions.

(4) Man-hour requirements and total man-hours required for processing the equipment.

5.3.4.1.4 Installation instructions **<install>**. Instructions shall be prepared to install the equipment properly, including use of tools; to make the necessary interconnections; and to lubricate, calibrate, and adjust the equipment.

a. Cable diagrams shall be included or referenced as necessary. When cable assemblies are not supplied but are required for bench test setup, instructions shall be prepared for fabricating interconnecting cable assemblies from spares and bulk supplies. The part number, drawing number, and manufacturer or designer for each part of the cable assembly shall be shown, and wires, connectors, pin connections, and letters or other designators shall be identified.

(1) Instructions shall be prepared for any mating connectors that call for a special procedure either to make the proper connection or to prevent damage to the connector. Cautions shall be included where necessary.

(2) A wiring diagram shall be prepared which fully identifies each wire to be connected, by color code or wire number if applicable. This diagram shall show the location of each pertinent terminal, which shall be identified by number or other marking, if available, or by position if neither is available. Where appropriate, voltage readings shall be annotated.

(3) All alternate connection patterns required for various modes of operation shall be shown and explained.

(4) Only one diagram shall be used to illustrate interconnection patterns which appear more than once within the same equipment.

b. For installation of plug-in items, diagrams shall be prepared or referenced showing the location of items that are not installed in the equipment when received. Instructions shall be prepared whenever special techniques or connections are required.

5.3.4.1.4.1 Assembly of equipment.

a. Instructions shall be prepared for assembling equipment that has been shipped unassembled. When the equipment is to be shelf or rack mounted, instructions shall also be prepared for assembly of the rack, if necessary, and installation of the equipment in the rack. As applicable, power requirements, connections, and initial control settings needed for installation purposes shall be included.

b. When the equipment is shipped or delivered in specially designed containers, unpacking instructions shall be prepared. If the containers are to be used again, kept for future use, turned in to supply, or require a special disposition method, the necessary procedures to restore the containers shall be included.

c. For security measures for electronic data, instructions shall be prepared for handling, loading, purging, overwriting, or unloading classified electronic data under usual conditions. Instructions shall meet current security regulations as they pertain to automation security.

5.3.4.1.4.2 Installation of the equipment.

a. Installation instructions shall be prepared for all of the following actions (including placing, mounting, and attaching).

(1) Cable and wiring interconnections.

(2) Proper use of special tools.

b. Installation instructions shall identify all dimensions that must be maintained in placing, mounting, or attaching items.

c. When initial adjustments can be made efficiently during installation, such adjustments shall be included.

d. For equipment designed and intended for use in more than one type of installation (e.g., field, fixed station, and mobile), instructions shall be prepared for each type of installation involved.

e. If performance of any step in the installation instructions requires the assistance of personnel from a higher level of maintenance, this shall be stated in a note similar to that below.

"**NOTE**

The following installation procedure must be made with the assistance of (insert level) maintenance personnel (include Military Occupational Specialty (MOS), if applicable)."

f. Installation instructions shall be considered complete only when they include instructions for:

(1) All required installation options (e.g., Electrostatic Discharge (ESD) control requirements).

(2) Accessory items.

(3) Auxiliary items (those that extend or increase equipment capability).

(4) Grounding of the equipment for both safety and proper operation.

(5) Torque requirements.

5.3.4.1.4.3 Special applications. Installation instructions which are common to all special applications of a system shall be prepared. Details resulting from the installation but peculiar only to the equipment into which the system is being installed shall be omitted (e.g., special treatment required when installing the system in a vehicle or aircraft).

5.3.4.1.4.4 Van and shelter installations. The following information shall be prepared only to the extent required for the applicable level of maintenance.

a. Instructions shall be prepared for the removal and replacement of each nonpermanent unit.

b. Installation instructions shall not be prepared when the equipment is permanently installed in vans or shelters.

c. Diagrams and instructions shall be prepared which pertain to electrical and interconnection wiring, exclusive of wiring peculiar to the equipment on which the installation is being made (e.g., headlight, ignition wiring).

d. Instructions shall be prepared for cable run locations, equipment locations, circuit breaker panels, and other similar details.

5.3.4.1.5 Preliminary servicing of equipment **<preserv>**. Instructions for all lubrication required on newly installed equipment shall be prepared.

5.3.4.1.6 Preliminary checks and adjustment of equipment **<prechkadj>**. Instructions for all checks and adjustments to be made on newly installed equipment shall be prepared. Information on the location of items such as controls and check points shall be prepared or referenced. Instructions shall be prepared for checks and adjustments that must be made before equipment is put into operation and for all other checks required to ensure proper operation of the equipment. These instructions shall include the following, as applicable:

a. Checks for interconnections.

b. Checks for grounding, including earth ground connections, earth conditioning for conduction, as well as a check of the grounding circuit for negligible resistance.

c. Checks for adequate clearance for rotating or moving devices.

d. Checks of initial settings of all controls that must be preset before power is to be applied.

e. All other checks needed to determine that power can be applied without injuring personnel or damaging the equipment.

f. Firm seating and connection of all plug-in parts, mating connectors, jacks, and plugs.

g. Cable and wire harness routing, dressing, and fastening.

h. Cautions against damaging transistors, diodes, and other electrically sensitive items.

i. Replacement of all covers, inspection and access doors, and plates.

j. Operation of safety interlocks and switches.

k. Operation of ventilating louvers and intake and exhaust ports.

l. Operation and content of liquid cooling systems.

m. Lubricants and Corrosion Prevention Control (CPC) procedures.

n. Switch and control settings that are preset at installation (installer's adjustments).

o. Presetting and adjustment of automatic controls.

p. Terminal connections.

q. Required terminal or capacitor strapping.

r. Preliminary test measurements.

s. Presetting operator's controls.

t. Normal operating checks.

u. After-installation orientation.

v. Burn-in of parts.

w. ESD control standards.

x. After operations, shutdown, checks, and inspections.

5.3.4.1.7 Preliminary calibration of equipment <**precal**>. Instructions for all calibration to be made on newly installed equipment shall be prepared.

5.3.4.1.8 Circuit alignment <**calign**>. Instructions shall be prepared for circuit alignment procedures. Applicable instructions shall be prepared in the following order.

a. External connections <**extconn**>. Connections to external lines required for each installation option shall be included. Connection instructions shall conform to the requirements for installing wiring and cabling interconnections.

b. Switch settings, patch panel connections, and internal control settings <**setconn**>. Instructions shall be prepared for all switch settings, patch panel connections, and internal control settings required for each installation option and mode of operation.

c. Alignment procedures <**alignproc**>. Instructions shall be prepared for all alignment procedures, including any variations required for different installation options and modes of operation.

5.3.4.1.9 Ammunition markings <**ammo.markings**>. Instructions shall be prepared for marking ammunition and ammunition containers.

5.3.4.1.10 Classification of defects <**ammo.defect**>. Procedures shall be prepared for performing visual inspection of ammunition/containers (pallets, boxes, etc.) and shall include classification and disposition of defective ammunition/containers.

5.3.4.1.11 Handling <**ammo.handling**>. Procedures shall be prepared for handling ammunition.

a. Unpacking <**ammo.unpacking**>. As a minimum, the following information shall be prepared.

(1) Any special sequence of action necessary to protect the ammunition.

(2) If a special design reusable container is involved for either the end item or components which are authorized for replacement, instructions shall be prepared to report or reenter the empty container through supply channels.

(3) Man-hour requirements and total man-hours required for unpacking the ammunition.

b. Packing <**ammo.packing**>. As a minimum, the following information shall be prepared.

(1) Any special sequence of action necessary to protect the ammunition.

(2) Instructions shall be prepared on how to package defective ammunition.

(3) Man-hour requirements and total man-hours required for packing the ammunition.

5.3.4.1.12 Procedures needed to activate ammunition, mine, etc <**arm**>. Procedures shall be prepared for activation of ammunition, mines, etc., preparatory to detonation.

5.3.4.2 Equipment / user fitting instructions work package <**perseqpwp**>. As applicable, equipment/user fitting instructions for personal use equipment shall be prepared.

5.3.4.3 Preventive maintenance checks and services (PMCS), including lubrication instructions. **(not required for aircraft TMs)**. The PMCS shall be based upon the principles of Reliability Centered Maintenance (RCM) logic and shall include PMCS information, periodic lubrication <**lubricant**> instruction, and applicable scheduled corrosion inspections. An introduction WP for PMCS shall also be prepared.

5.3.4.3.1 PMCS introduction work package <**pmcsintrowp**>. This work package shall explain the purpose and use of the PMCS data.

a. An explanation shall be prepared for each PMCS entry and any general checks/services that are common to the entire piece of equipment. The explanation for the item numbers shall detail how the item numbers are used when recording results of PMCS on DA Form 2404, Equipment Inspection and Maintenance Worksheet.

b. General statement(s) shall be prepared which apply to the overall understanding of lubrication requirements.

c. Lubricants shall be identified by standard military symbols in accordance with MIL-HDBK-113 and MIL-HDBK-275. The following lubrication interval symbols shall be used, as applicable.

D—daily
W—weekly
M—monthly
Q—quarterly
S—semiannually
A—annually
MRA—maintenance repair action
B—biennially
H—hours (operated)
MI—miles (operated)
KM—kilometers (operated)
RDS—rounds fired
OC—on-condition

d. A statement concerning Corrosion Prevention and Control (CPC) shall be prepared. This statement shall contain maintenance instructions or reference CPC requirements contained in the applicable maintenance instructions. In addition, if the inclusion of such instructions are applicable, a statement shall be prepared which states that the instructions are mandatory.

(1) Oil filter statement. As applicable, the following statement shall be included verbatim:

"Oil filters shall be serviced/cleaned/changed, as applicable, when:

They are known to be contaminated or clogged,

Service is recommended by AOAP laboratory analysis, or

At prescribed hardtime intervals."

(2) AOAP sampling interval statement. The following statement shall be inserted:

"Engine oil/transmission oil/hydraulic fluids must be sampled at (insert applicable hour/mileage time frame) as prescribed by (insert TB 43-0106, Aeronautical Equipment Army Oil Analysis Program (AOAP), or DA PAM 738-750, Functional Users Guide for the Army Maintenance Management System (TAMMS))."

(3) AOAP not available/non-enrolled statement. When a component/equipment is not enrolled in the AOAP or oil analysis support is not available, the following statement shall be inserted:

"This (enter name of component/equipment) is not enrolled in the Army Oil Analysis Program. HARDTIME INTERVALS APPLY."

(4) Warranty hardtime statement. The following statement shall be used, as applicable:

"For equipment under manufacturer's warranty, hardtime oil service intervals shall be followed. Intervals shall be shortened if lubricants are known to be contaminated or if operation is under adverse conditions (such as longer-than-usual operating hours, extended idling periods, extreme dust)."

e. When the equipment contains fluids, such as lubrication oil or hydraulic fluid, leakage criteria shall be prepared for the PMCS introduction as follows and referred to in the NOT READY/AVAILABLE IF: column.

"It is necessary for you to know how fluid leakage affects the status of the (enter component/equipment name). Following are types/classes of leakage you need to know to be able to determine the status of the (enter component/equipment name). Learn these leakage definitions and remember - when in doubt, notify your supervisor.

CAUTION

- Equipment operation is allowed with minor leakages (Class I or II). Consideration must be given to fluid capacity in the item/system being checked/inspected. When in doubt, notify your supervisor.

- When operating with Class I or II leaks, continue to check fluid levels as required in the PMCS.

- Class III leaks should be reported immediately to your supervisor.

(1) Class I — Seepage of fluid (as indicated by wetness or discoloration) not great enough to form drops.

(2) Class II — Leakage of fluid great enough to form drops but not enough to cause drops to drip from item being checked/inspected.

(3) Class III — Leakage of fluid great enough to form drops that fall from item being checked/inspected."

5.3.4.3.2 PMCS work package <**pmcswp**>.

5.3.4.3.2.1 PMCS procedures. The PMCS procedures shall include the checks and services data described in 5.3.4.3.2.1.1 and when specified by the acquiring activity, an illustration of the equipment shall be included. This illustration shall include a routing diagram by which the PMCS will be performed.

5.3.4.3.2.1.1 PMCS data preparation <**pmcstable**>. PMCS data shall consist of the entries described below. For **paged-based TMs**, these checks and services data entries shall be in the form of **standard information**.

a. Item number **<itemno>**. Item numbers **(ITEM No.)** shall be assigned to the PMCS procedures. The PMCS procedures shall be arranged in a logical sequence requiring minimum time and motion on the part of the person(s) performing them and shall be so arranged that there will be minimum interference between persons performing the checks simultaneously on the same end item.

b. Intervals **<interval>**. The designated interval **(INTERVAL)**(i.e., “before”, “during”, “after”, “weekly”, etc.) when each check is to be performed shall be included. Procedures done first or most frequently (i.e., "before" checks and services) shall appear prior to "during" and "after" checks and services. When more advantageous to the user, intervals shall be subgrouped by crewmember(s). The “core” PMCS intervals which can be used are as follows:

Before
During
After
Daily
Weekly
Monthly
Quarterly
Semiannually
Annually
Periodic
Intermediate (**Aviation only**)
Manhour/day (**Aviation only**)
Phased (**Aviation only**)
Other

c. Man-hours **<manhours>**. Man-hours **(MAN-HOUR)** required to complete all prescribed lubrication services shall be stated to the nearest 10th of an hour.

d. Item to be checked or serviced **<checked>**. The items listed **(ITEM TO BE CHECKED OR SERVICED)** shall be identified in as few words as possible to clearly identify the item. Usually the common name (e.g., bumper, gas can and mounting bracket, front axle, etc.) will be enough.

e. Procedures **<pmcsproc>**. The procedure **(PROCEDURE)** by which each check is to be performed, as well as any information required to accomplish each check or service, including lubrication, appropriate tolerances, adjustment limits, and instrument gage readings shall be provided. Illustrations shall be prepared to identify the location or the process of the task being performed and shall be integrated with the procedures. Whenever replacement or repair is recommended, the maintenance task shall be included or the applicable maintenance instruction work package may be referenced.

(1) Lubrication procedures shall be prepared including information on authorized lubricants, lubrication intervals, man-hour requirements, and the AOAP. Lubrication instructions shall be prepared so as to enable the user to receive, lubricate, and return to an acceptable performance standard all components of the equipment in a minimum of time with the skills, tools, test equipment, and spare parts authorized by the LSA, LMI, or MAC. Information shall be included for any special lubrication required under extreme temperature, altitude, and humidity conditions within the limits established by the design specification for the equipment.

(2) Lubricant types and abbreviations for flight vehicles and components shall be identified by standard military symbols as specified in MIL-HDBK-275; lubricant types and abbreviations for ground equipment systems, lubricants, functional fluids, preservatives, and specialty products shall be identified by standard military symbols in accordance with MIL-HDBK-113. (Required abbreviations not covered in the appropriate handbook will be provided by the acquiring activity.)

(3) Lubrication instructions shall include all applications, procedures, lubricants, and lubrication points. When grouped lubrication points require the same lubricant at the same interval, the type and number of points shall be identified and described by one of the following methods.

(a) Multi-headed arrows. Multi-headed, solid-shafted arrows shall point to each of the lubrication points.

(b) Lubrication point notes. Lubrication point notes shall contain instructions for applying lubricants, taking into account the following factors: type, grade, availability, and properties of the prescribed lubricant; expected temperature; lubrication guns and tools available to authorized maintenance level; types of lubrication fittings; and possible ill effects of excessive or insufficient lubrication. Caution shall be stressed where over- or under-lubrication of a part will damage that part or closely associated parts.

(4) Disassembly and hand-packing instructions shall be prepared for medium- and high-speed antifriction bearings that are sensitive to the amount of lubrication applied and do not have bleed holes or relief valves.

(5) Cleaning, disassembling, and assembling instructions required before or after lubrication shall be prepared or referenced.

(6) Instructions shall be prepared for washing and natural drying of finely machined and dirt-sensitive parts before relubricating. Use of compressed air jets or temperatures above 212° F shall not be prescribed.

(7) Instructions shall not specify a coating of preservative material, either before or after packing parts that are lubricated with grease; nor shall they specify an application of oil, solvent, or additional grease to a "sealed-for-life" or prepackaged antifriction bearing.

(8) Where applicable, the statement "For Arctic operation, refer to FM 9-207, Operation and Maintenance of Ordinance Materiel in Cold Weather (0 degrees to minus 65 degrees F)." shall be inserted as a note. When specific restrictions, preferred grades of lubricant, and other conditions exist, notes shall be made. For example,

NOTE

When MIL-L-2104 lubricant is authorized, use 15W-40 (OE/HDO-15/40) when available and applicable temperature range exists.

or

NOTE

15W-40 oil is not authorized in this particular (enter component name).

f. Equipment not ready/available if: **<eqpnotavail>**. A brief statement of the condition **(EQUIPMENT NOT READY/AVAILABLE IF:)**(e.g., malfunction, shortage) that would cause the equipment to be less than fully ready to perform its assigned mission shall be provided. If the procedure contains detail steps the statement shall be placed opposite the applicable step.

5.3.4.3.2.1.2 Mandatory replacement parts **<mrplpart>**. All items that must be replaced during PMCS whether they have failed or not shall be identified. For **frame-based TMs**, the PMCS shall include the mandatory replacement parts information entries listed below for each mandatory part. For **page-based TMs**, the information entries shall be placed in a table (Refer to figure 1). The table shall follow the PMCS.

a. Interval
b. Item number.
c. Part number.
d. National stock number (NSN).
e. Nomenclature.
f. Quantity.

If there are no mandatory replacement parts for your PMCS, the following statement shall be included in lieu of parts information:

"There are no replacement parts required for these PMCS procedures."

5.3.4.3.3 Preventive Maintenance Checklist (PMC) **(operator only)**. When specified by the acquiring activity, a PMC shall be prepared as a separate document. Information for a PMC shall come from the applicable operator's PMCS.

5.3.4.4 Preventive maintenance inspections work package **(aircraft only) <pmiwp>**. This work package shall contain the requirements outlined in 5.3.4.4.1 through 5.3.4.4.3.

5.3.4.4.1 General information and introduction **(aircraft only)**. The following paragraph shall be inserted.

"**GENERAL INFORMATION**

This work package contains complete requirements for special inspections, overhaul and retirement schedule, and standards of serviceability applicable to the aircraft. The inspections prescribed in this work package shall be accomplished at specified periods by AVUM activities, with the assistance of AVIM activities when required. Complete Daily, Intermediate, Periodic, or Phased inspections are contained in the (insert applicable aircraft inspection checklist TM)."

5.3.4.4.2 Standards of serviceability **(aircraft only)**. The following paragraph shall be inserted.

"Standards of serviceability to be utilized in the day-to-day inspection and maintenance of the aircraft can be found as fits, tolerances, wear limits, and specifications in the aircraft maintenance manuals. Standards of serviceability for transfer to aircraft are contained in TM 1-1500-328-23."

5.3.4.4.3 Special inspections **(aircraft only)**.

a. Definition and general information. The following paragraph shall be inserted.

"This information supplements scheduled inspections as outlined in the applicable aircraft inspection checklists. Inspection of items which are required to be inspected at intervals not compatible with airframe operating time or airframe inspection intervals is also included. Refer to DA PAM 738-751 (Functional Users Manual for the Army Maintenance Management System-Aviation (TAMMS-A)) for applicable forms, records, and worksheets required for these inspection intervals. Typical examples of this type of inspection are as follows.

(1) Inspections which are solely contingent upon specific conditions or incidents that occur (e.g., hard landings, overspeed, or sudden stoppage), wherein immediate inspection is required to ensure safe flight.

(2) Inspection of components or airframe on a calendar basis: e.g., first aid kits, weight and balance check, aircraft inventory."

b. Requirements. Components and other items which qualify under the criteria for special inspections, e.g., hard landings, sudden stoppage, overspeed shall be included. These inspections shall be grouped under specific aircraft areas. A line drawing of the aircraft or accessory showing sequence for inspection by area shall be included. The area identified shall include all surfaces, materials, components, and equipment pertaining to that specific location. The following inspection data entries shall be included, as applicable. For **page-based TMs**, the information entries shall be placed in a table <**pmi.pecul.tab**>.

(1) Aircraft serial or tail number <**serialno**>.

(2) Date of inspection <**date**>.

(3) Area number <**areano**>.

(4) Inspection number <**itemno**>.

(5) Inspection interval <**interval**>.

(6) Name of component being inspected <**compname**>.

(7) Inspection procedure <**proc**>.

5.3.4.5 Aircraft lubrication instructions work package **(aircraft only) <lubewp>**. This work package shall contain the requirements outlined in 5.3.4.5.1 and 5.3.4.5.2.

5.3.4.5.1 Lubrication instructions **(aircraft only)**. Lubrication schedules shall be prepared to present all applications and procedures, lubricants, and lubrication points to completely lubricate aircraft.

5.3.4.5.2 Lubrication charts **(aircraft only)**.

a. Lubrication charts shall consist of a main drawing prepared as a three-dimensional diagram, and such enlarged or detailed views as are considered necessary to identify items which otherwise would be obscured. They shall show all lubrication requirements for all parts of the aircraft requiring periodic lubrication, other than those lubricated by the main engine oil system. The charts shall also indicate type of lubricant, method of application, and frequency. (Refer to figure 2.)

b. Use of black silhouette figures representing a likeness of the tool used in the application (oil can, grease gun, brush, or hand) shall be the accepted means of presenting application methods on the lubrication chart.

c. Abbreviations, as specified in MIL-HDBK-275, shall be used to present lubricant types. In the event a lubricant does not have an abbreviation listed in MIL-HDBK-275, the abbreviation shall be provided by the procuring activity. Assigned application symbols, type abbreviations, and frequency shall be placed within the standard lubrication symbols.

d. Each application symbol and lubricant abbreviation used shall be defined. Notes may be used to specify requirements other than normal.

5.3.4.6 Ammunition maintenance work package **<ammowp>**. This work package shall reference or contain the following:

a. All procedures required for care and handling of ammunition **<ammo.handling>**, including hazard distances, storage, special requirements, prevention of deterioration due to rough handling, exposure to adverse weather conditions or other hazards. Visual inspection criteria shall be prepared to determine item serviceability.

b. Procedures shall be prepared for disposition of defective ammunition **<ammo.defect>**.

c. Use of cleaning materials and paint authorized for use in the specified maintenance operations **<service>**.

5.3.4.7 Auxiliary equipment maintenance work package **<auxeqwp>**. When auxiliary equipment (e.g., Modified Tables of Organization and Equipment (MTOE) items, etc.) maintenance TMs or maintenance requirements cards are not procured for peculiar equipment furnished by the contractor, maintenance instructions shall be prepared. Concise step-by-step procedures shall be prepared for proper care of auxiliary equipment while in and out of service. These procedures shall include instructions for storage, preventive maintenance, lubrication, operating checks, and adjustments, as applicable. Maintenance instructions shall also be included, as applicable, for special tools that have been fabricated (Refer to 5.3.4.14).

5.3.4.8 Facilities work package **(DMWR only)** <**facilwp**>. A description of all facilities, such as test stands, test tracks, clean rooms, shielded rooms, or other facilities that are required to do the maintenance work shall be included. Reference shall be provided for any specifications or standards that these facilities must meet. When approved by the acquiring activity, data from these standards may be included in the procedures.

5.3.4.9 Maintenance work packages **<maintwp>**. Maintenance information shall be functionally divided into individual maintenance work packages **<maintwp>**. The technical content structure for these work packages shall be consistent from work package to work package. Illustrations shall be prepared to identify the location or the process of the task being performed and shall be integrated with the procedures.

a. Each maintenance work package shall include all authorized maintenance tasks **<maintsk>**. Tasks shall consist of complete start-to-finish maintenance procedures **<proc>** in a logical sequence of occurrence. Task titles **<title>** shall be identical to FGC titles as used in the applicable MAC and RPSTL. Maintenance tasks are described in 5.3.4.9.1.

b. Maintenance instructions shall reference or contain all procedures required for any unusual or critical steps such as specifying Quality Assurance (QA) checks **(depot and aviation only)**, care and handling of ESD sensitive items and all hazardous material (e.g., ammunition, radioactive components or materials, including prevention of deterioration due to rough handling, exposure to adverse weather conditions, or other hazards). Visual inspection and safety criteria shall be prepared to determine item serviceability. Instructions shall also contain procedures for disposition of defective ammunition. Procedures shall be prepared for use of cleaning materials and paint authorized for use in the specified maintenance operations. Tools shall be described only when the tool or procedure is peculiar or abnormal.

c. When peculiar to the equipment, applicable Corrosion Prevention and Control (CPC) procedures shall be included, or the work package shall reference applicable CPC publications.

d. National Stock Numbers (NSNs) shall not be used in procedural steps, illustrations, or legends of maintenance work packages. Part numbers shall not be used in procedural steps, illustrations, or legends, except when essential for identification. However, in work packages for **frame-based TMs only**, part number and NSN information shall be accessible from all procedural steps, illustrations, or legends when necessary to facilitate usability and parts ordering.

e. Aviation maintenance TMs shall reference procedures in TM 1-1500-204-23, as applicable.

f. The maintenance instructions shall be prepared to include required environmental control data and information. Instructions shall be prepared for information on any special maintenance required under extreme temperature, altitude, and humidity conditions within the limits established by the design specification for the equipment.

g. (**Depot only**) A Reliability, Availability, and Maintainability (RAM) table shall be prepared listing the pertinent measurable RAM ranges for the major overhauled components (Refer to figure 3). The RAM requirements shall be prescribed by maintenance engineering of the acquiring activity and when established by maintenance engineering shall include critical measurement factors, such as Meantime Between Failures (MTBF), Meantime Between Corrective Maintenance (MTBCM), Maximum Time to Repair (MTTR), availability, and maintenance ratio. The reliability and availability portion of the table shall give the minimum acceptable values while the maintainability portion shall provide the maximum allowable rates. Availability may be expressed as a probability versus a qualified number. When specified by maintenance engineering of the aquiring activity, the RAM information may be prepared in a narrative format. (Refer to figure 3.)

5.3.4.9.1 Maintenance tasks **<maintsk>**. Maintenance tasks shall be prepared for each authorized maintenance level in the general order listed below. For each maintenance task, illustrations shall be used to support or clarify the text, including schematics, wiring diagrams, parts location drawings and other visual aids.

Assembly and preparation for use **(aviation only)** **<prepforuse>**.
Servicing **<service>**.
Ground handling **<groundtsk>**
Inspection of installed items **<inspinstitm>**.
Removal **<remove>**.
Disassembly **<dissassem>**.
Cleaning **<clean>**.
Inspection-acceptance and rejection criteria **<acptrejinsp>**.
Nondestructive Testing Inspection (NDTI) **<ndti>**.
Repair or replacement **<repair-rplc>**.
Alignment **<align>**.
Painting **<paint>**.
Lubrication **<lube>**.
Assembly **<assem>**.
Test and inspection **<test-inspect>**.
Installation **<install>**.
Adjustment **<adjust>**.
Calibration **<calibration>**.

Radio interference suppression **<ris>**.
Placing in service **<pis>**.
Testing **<test-pass>**.
Preservation, packaging, and marking **(depot only) <ppm>**.
Overhaul and retirement schedule **(aircraft only) <orsch>**.
Preparation for storage or shipment **<pss>**.
Ammunition markings **<ammo.markings>**.
Classification of ammunition defects **<ammo.defect>**.
Handling ammunition **<ammo.handling>**.
Procedures for ammunition activation **<arm>**.

5.3.4.9.1.1 Maintenance task requirements. Additional mandatory or unique technical information or additional explanations may be required to be included in the maintenance tasks listed in 5.3.4.9.1, above. This information is described in 5.3.4.9.1.2 through 5.3.4.9.1.28. The following general requirements apply to most of the maintenance tasks in 5.3.4.9.1, above.

a. Peculiar instructions shall be prepared for lockwiring, installing cotter pins, use of sealing compounds, lubricants, or corrosion prevention compounds and similar operations with applicable references to the expendable and durable items list.

b. Procedures shall not be prepared for separation of bonded, press-fitted, soldered, welded, or riveted parts, or the removal of electronic circuitry parts, unless such removal is necessary to clean, inspect, or test separately.

c. If servicing (i.e., pressurizing and charging with gas, lubrication, etc.) is required upon completion of a maintenance task, include this information as part of the task.

d. Warnings and cautions shall be included whenever chemicals or cleaning compounds are used or combined which may result in a dangerous or hazardous mixture. Whether the danger is to personnel or equipment, it shall be identified and the effect (e.g., gases, fumes, caustic, and fire) shall be stated.

e. For aircraft, instructions shall be prepared for cleaning and washing the entire aircraft. Instructions shall be prepared for the removal of the battery, relief tube, power plant, and armament exhaust deposits, or other items or material as necessary. Instructions shall also be prepared regarding components which require relubrication after the aircraft has been washed or steam cleaned.

f. Torque requirements, values, and sequences shall be indicated. Only critical torques **<torque>** shall be indicated in task steps. All noncritical torques will be covered by the Torque Limits work package and a reference thereto. Torque values shall be given for all structural attaching hardware, fluid couplings (fuel, oil, hydraulic, pneumatic, etc.), and connections. Torque values shall include torque correction factors when crowfoot extensions, thread lubricants, and cadmium-plated screws or nuts are used. Torque values identified in the tasks must reflect torque wrenches authorized to personnel targeted to perform tasks. Upon completion of torque action, instructions shall be prepared on use of an orientation mark (striping).

g. Such terms as "reverse the disassembly procedures" or "installation is the reverse of removal" shall not be used in any maintenance task.

h. Maintenance procedures or steps that have a major quality assurance effect shall be followed by a statement such as “QA check”, to identify them.

i. **(DMWRs only)** For items that have parts with specific characteristics, wear limits, specified performance requirements, or fatigue characteristics or tolerances, overhaul inspection procedures (OIP), shall be included, in any applicable maintenance task. The OIP shall consist of the characteristics being inspected for, inspection methods, and the acceptance/reject criteria that must be met. For characteristics having a major quality assurance effect, a statement such as "QA check" shall be placed immediately following the characteristic to which it applies. An illustration shall accompany the OIP. A reference letter may be included on the illustration to aid in locating the critical inspection characteristics of the parts. The OIPs shall be placed immediately after the maintenance step for which it applies. When a maintenance task contains an excessive number of parts requiring OIPs, the OIPs may take the form of a consolidated table or list (Refer to figure 4). A separate OIP table or list shall be provided for each part of the item that requires a critical inspection. OIP tables may be placed in a separate WP (Refer to 5.3.4.13). If separate OIP WPs are developed, they shall be referenced within the procedural step where they apply.

5.3.4.9.1.2 Assembly and preparation for use **(aviation only) <prepforuse>**.

a. Procedures shall be prepared for unpacking, assembly, and installation. When the equipment is shipped or delivered in specially designed containers, unpacking instructions shall be prepared. If the containers are to be used again, kept for future use, turned in to supply, or require a special disposition method, the necessary procedures for reassembly of the container shall be prepared. These instructions shall be supported by illustrations. As applicable, power requirements, connections, and initial control settings needed for installation purposes shall be prepared.

b. For security measures for electronic data, instructions shall be prepared for handling, loading, purging, overwriting, or unloading classified electronic data under usual conditions. Instructions shall meet current security regulations as they pertain to automation security.

5.3.4.9.1.3 Servicing **<service>**.

a. Instructions shall be prepared for replenishment of fuel; oil; hydraulic or other fluids; oxygen, nitrogen, other gases; and tire pressure, plus any other such items and materials (except for lubricants) required for complete servicing of the equipment.

b. Servicing instructions shall be supplemented with a diagram showing locations of regular and emergency servicing points. Items located on each side of the equipment which require servicing will be illustrated and identified as right and left side. NO STEP areas on walkways leading to any tank (in an aircraft) shall be indicated and necessary cautions included.

c. All expendable and durable items used in the servicing instructions shall be identified by military and federal standard nomenclature and designation number. A servicing diagram shall be referenced or included to support the procedures when required.

d. The warnings and cautions to observe in servicing a particular tank or reservoir (e.g., grounding and prevention of fire hazards) shall be stated clearly.

e. Instructions shall be prepared regarding access to any out-of-the-way or unusual places requiring service.

5.3.4.9.1.4 Ground handling <**groundtsk**>. Descriptions, instructions, and necessary cautions and warnings for ground handling of the aircraft/equipment, including any information needed in extreme cold, heat, humidity, dust, or other unusual or extreme conditions shall be prepared. Instructions for folding and unfolding appropriate parts such as rotor blades or wings, rudders, and fans shall also be included. For aircraft, instructions shall be prepared that are required for blocking and supporting the aircraft during performance of the operation or procedure involved. The following ground handling procedures shall be provided.

a. Towing <**tow**>.

b. Jacking <**jack**>.

c. Parking <**park**>.

d. Mooring <**moor**>.

e. Covering <**cover**>.

f. Hoisting <**hoist**>.

g. Sling loading <**sling**>.

h. External power <**extpwr**>.

5.3.4.9.1.5 Inspection of installed items <**inspinstitm**>. Instructions shall be prepared for inspection of components, assemblies, or parts installed on the equipment. Procedures shall indicate that inspection will be performed with the item in its normally installed position or condition, considering accessibility and visibility of the item being inspected. The purpose of the inspection (to determine if the item is damaged, deteriorated, or incomplete to the extent that it should be replaced or repaired) shall be stated. Procedures shall be prepared for inspecting solder joints on an electronic item, welds on an armored vehicle, fluid leakage on vehicles, connectors on electronic devices, and other items to identify defects that must be corrected.

5.3.4.9.1.6 Removal <**remove**>.

a. Instructions shall be prepared in the logical removal sequence prescribed by the FGC. Illustrations shall be used to support and clarify the text. Instructions shall be prepared for checking and recording gear wear patterns, backlash, ESD protective control measures, measurements and tolerances for determining thickness of shims and purpose for shims, and separating and indexing parts for the assembly. Procedures shall identify items which must be matched or precision mated when installed at a later time.

b. **(DMWR only)** Instructions shall be prepared for recording the condition of the item/assembly, marking, handling, and storing the item.

5.3.4.9.1.7 Disassembly <**disassem**>. Instructions shall be prepared for disassembly of components, assemblies, or subassemblies to the extent specified by the MAC and SMR coded items. Illustrations shall be used to support and clarify the text. Instructions shall be prepared for precision matched or mated components, assemblies, subassemblies, or parts (other than common hardware), including ESD sensitive items, to insure they will be marked, handled, and stored to preclude damage and to ensure assembly and installation in their matched positions.

5.3.4.9.1.8 Cleaning **<clean>**. Cleaning procedures, methods, special equipment, and materials that are required shall be specified. Instructions shall be prepared for corrosion prevention treatment of metal parts after cleaning.

a. All materials used in the cleaning and corrosion prevention of equipment, components, or parts shall be referenced and contained in the expendable and durable items list.

b. Procedures shall include cautions to avoid damage of components and to prevent the entrance of water or other solvents into electrical components, ducts, or like openings.

c. Warnings and cautions shall be prepared whenever chemicals or cleaning compounds are used or combined which may result in a dangerous or hazardous mixture. Whether the danger is to personnel or equipment shall be identified and the effect (e.g., gases, fumes, caustic, and fire) shall be stated.

d. For aircraft, detailed instructions shall be prepared for cleaning and washing the entire aircraft. Instructions shall be prepared for the removal of the battery, relief tube, power plant, and armament exhaust deposits, or other items or material as necessary. Instructions shall also be prepared regarding components which require relubrication after the aircraft has been washed or steam cleaned.

5.3.4.9.1.9 Inspection-acceptance and rejection criteria **<acptrejinsp>**.

a. Inspection requirements shall be prepared to include acceptance and rejection information sufficient to determine that new, repaired, and used components, assemblies and subassemblies conform to wear limits, fits, and tolerances established.

b. (**Depot level and aviation only**) Inspection procedures that have a quality impact shall be highlighted. This can be done using a statement such as “QA check” following the procedure or by any other means that would emphasize quality assurance. Instructions shall be prepared for tagging all rejected parts, other than mandatory replacement parts, and listing the reasons for rejection. Visual inspection procedures shall be prepared to detect defects such as burrs, cracks, bends, or dents. Accurate and measurable accept or reject requirements and standards shall be prepared which allow the user to determine if the item under inspection conforms to the tolerances, wear limits, fit, or other standards and requirements presented.

5.3.4.9.1.10 Nondestructive Testing Inspection (NDTI) **<ndti>**.

a. **(Aircraft only)** When specified by the acquiring activity, TM 55-1500-335-23 shall be the only NDTI document referenced in the NDTI procedures, and technical provisions of this TM shall be followed.

b. **(Aircraft only)** Individual NDTI procedures shall be specified for each part requiring NDTI. In order to satisfy this requirement, the following shall be prepared for aircraft TMs.

(1) If penetrant is required, identification of the particular TM 55-1500-335-23 process that is applicable.

(2) If magnetic particle inspection is required, the specific TM 55-1500-335-23 method, the type of magnetization, and amount of current or ampere turns.

c. The reject criteria shall be specified in all cases. This shall be done by means of a blanket statement, individual criteria for a part, or a combination of both.

d. Instructions for use of visible dye penetrants shall not be included as part of NDTI instructions unless specified otherwise by the proponent activity. When required, refer to TM 55-1500-335-23 for preparation of those instructions.

e. When several NDTI methods are permitted, the relative order of preference shall be specified.

f. Instructions shall be prepared for removing primer and/or paint for TMs that require the removal process as part of NDTI procedures. If a part requires a special process, this procedure must be contained within the NDTI procedure for that part.

g. Cleaning requirements prior to, during, and after NDTI shall be specified. If a part has a built-in bearing, then a procedure shall be prepared to ensure protection of the bearing for the NDTI procedure.

5.3.4.9.1.11 Repair or replacement **<repair-rplc>**. Instructions shall be prepared for repair or replacement to restore an item to a completely serviceable or fully mission capable status.

5.3.4.9.1.12 Alignment **<align>**. Detailed instructions shall be prepared for alignment procedures to adjust specified variable elements of an item to bring about optimum or desired performance.

5.3.4.9.1.13 Painting **<paint>**. Instructions shall be prepared for required painting, refinishing, and marking of assembled components, assemblies, subassemblies, or end item. Reference may be made to TM 55-1500-345-23, TM 1-1500-204-23, SB 11-573, AR 746-1, TB 43-0209, TB 43-0118, TM 43-0139, or others as appropriate.

5.3.4.9.1.14 Lubrication **<lube>**.

a. Pertinent mandatory lubrication instructions, CPC procedures, and general lubrication instructions not contained elsewhere shall be prepared and appear here.

b. **(Depot and aviation only)** Lubrication procedures which have a major quality assurance effect shall be immediately followed by a statement such as “QA check” to identify them.

5.3.4.9.1.15 Assembly **<assem>**. Step-by-step procedures shall be prepared for assembling items disassembled or removed that make up the components, assemblies, or subassemblies. Illustrations shall be used to support and clarify the text.

a. Instructions shall be prepared for assembling precision-matched or mated parts marked during disassembly.

b. Instructions shall be prepared for checking and recording gear wear patterns, backlash, shimming requirements, and the indexing of parts to ensure proper alignment during assembly. The purpose of shims shall be given, (e.g., adjust backlash, prevent metallurgical reaction, etc.).

c. Torque requirements, values, and sequences shall be indicated. Only critical torques **<torque>** shall be indicated in task steps. All noncritical torques will be covered by the Torque Limits work package (Refer to 5.3.4.15). Torque values shall be given for all structural attaching hardware, fluid couplings (fuel, oil, hydraulic, pneumatic, etc.), and connections. Torque values shall include torque correction factors when crowfoot extensions, thread lubricants, and cadmium-plated screws or nuts are used. Torque values identified in the tasks must reflect torque wrenches authorized to personnel targeted to perform tasks. Upon completion of torque action, instructions shall be prepared on use of an orientation mark (striping).

d. Instructions such as "reverse the disassembly procedure," shall not be used.

e. ESD standards, ESD sensitive items along with the protective and control measures to be taken, and CPC procedures shall be identified.

f. **(Depot and aviation only)** Assembly procedures which have a major quality assurance effect shall be immediately followed by a statement such as “QA check” to identify them.

5.3.4.9.1.16 Test and inspection **<test-inspect>**. Procedures shall be prepared for testing and inspection during or after assembly to ensure proper assembly of the item. Correct methods of testing; procedures for making tolerance checks; and procedures for inspection of distance measurements (e.g., clearance, end play, backlash) shall be prepared. Measurement criteria and tolerances shall reflect the Test Measurement and Diagnostic Equipment (TMDE) available to the user. For **Depot and aviation only,** test and inspection procedures which have a major quality assurance effect shall be immediately followed by a statement such as “QA check” to identify them.

5.3.4.9.1.16.1 Inspection and test of conventional and chemical ammunition or components containing radioactive materials **(-30, -40, and AVIM only)**. The following information shall be prepared.

a. A statement to the effect that inspection criteria are provided to assure that maintenance performed will restore the items to an acceptable quality level shall be included. The types of inspection procedures shall, at a minimum, include a pre-maintenance inspection to be conducted during unpacking, in-process inspections, and final acceptance inspection. Regulations and technical publications relating to policy responsibility and procedures applicable to ammunition stockpile reliability, ammunition surveillance, radioactive materials procedures, and quality evaluation programs shall be referenced. When approved by the acquiring activity these procedures contained in other publications shall be included in the task.

b. Instructions shall be prepared for inspection methods or techniques used to detect defective components or end items being processed. Classification of Material Defects tables **(standard information) <defect.tab>** shall be prepared for ammunition components and packaging and packing material (Refer to figure 5). The tabulated data shall include the following entries.

(1) A list of categories of defects <**defecttype**> (minor, major, critical) by the defects attributable to each component.

(2) The corrective action to be taken <**actionreq**> or a reference <**xref**> to the corrective action.

(3) The inspection methods <**insp-method**> used to determine if corrective action was accomplished.

(4) The acceptable quality level <**acceptqual**> established for each defect.

c. Visual inspection criteria shall be prepared for the packing of the items in conformance with the inspection criteria noted in subparagraph a. above.

d. Detailed procedures and criteria shall be prepared for function testing. When test fixtures must be fabricated, diagrams and instructions for the fabrication shall be prepared. Where ammunition is required for function testing weapons, it shall be identified by Department of Defense Ammunition Code (DODAC), NSN, and nomenclature, to include dummy rounds.

e. Instructions shall be prepared to establish a uniform system of examination for deterioration or damage. Definitions shall be prepared to explain minor, major, and critical defects. Lower maintenance levels shall be included, when appropriate.

f. A classification of defects (i.e., minor, major, or critical) for both functioning and nonfunctioning categories shall be included. The criteria shall conform to the publications noted in subparagraph b. above.

g. Instructions for disposition of lots shall be prepared and shall be as specified by the acquiring activity.

5.3.4.9.1.16.2 Pre-embarkation inspection of material in units alerted for overseas movement. Pre-embarkation inspection procedures shall be prepared, if applicable, and shall be as specified by the acquiring activity.

5.3.4.9.1.17 Installation **<install>**. Procedures shall be prepared for installation of the item. Illustrations shall be used to support and clarify the text.

a. Instructions shall be prepared for painting, refinishing, and marking the item prior to its installation in the next higher assembly of the equipment.

b. Inspection procedures shall be prepared for checking alignment and adjustment of the item during the installation sequence. These instructions shall include a statement that adjustment, servicing, testing, and/or an operational check is required.

c. Instructions such as "reverse the removal procedure," shall not be used.

d. Peculiar instructions shall be prepared for lockwiring, installing cotter pins, use of sealing compounds, lubricants, or corrosion prevention compounds and similar operations with applicable references to the expendable and durable items list.

e. Information shall be prepared for shelf-life items, mandatory replacement parts, etc.

f. Instructions shall be prepared for pressurizing and charging with gas, including all safety requirements.

5.3.4.9.1.18 Adjustment **<adjust>**. Adjustment instructions shall be prepared that may be required before operating the part, system, or end item.

5.3.4.8.1.19 Calibration **<calibration>**. Equipment that requires calibration after assembly or installation shall be indicated, and reference shall be made to the publication containing the applicable calibration procedure. For **frame-based TMs**, the calibration procedures contained in other publications may be included in the task, when approved by the acquiring activity.

5.3.4.9.1.20 Radio interference suppression **<ris>**.

a. Instructions shall be prepared for primary components in the suppression system and replacement of these primary components.

b. Secondary components shall be referenced to pertinent maintenance procedures containing removal and installation instructions.

c. Instructions shall be prepared for testing radio interference suppression components.

5.3.4.9.1.21 Placing in service **<pis>**. Instructions shall be prepared for actions not previously noted that may be required for an assembly, component, or end item. Instructions shall be prepared such as removal of an item from storage and preparation for installation on an end item. Final servicing checks, calibration, leak checks, charging, pressurizing, and operational checks shall be prepared.

5.3.4.9.1.22 Testing **<test-pass>**. Instructions shall be prepared, as applicable, to test the performance of components, assemblies, and subassemblies prior to installation in the end item. The following instructions are required for depot and aviation maintenance.

a. **(Depot and aviation only**) Instructions shall be prepared for recording the results of the testing. All testing procedures that have a major quality assurance effect shall be immediately followed by a statement such as “QA check” to identify them.

b. (**Depot only**) Information shall be prepared for final testing of the highest assembly or equipment/end item involved to assure that the parameters of reliability, availability, maintainability, and durability are met. The following procedures shall be prepared.

(1) Inspection. Inspection procedures shall be prepared that are required prior to final testing to assure that the item is complete and ready for final testing. Instructions shall be prepared for any minor preparation tasks needed prior to final testing.

(2) Lubrication. Any final lubrication procedures that need to be done prior to final testing shall be prepared.

(3) Final test procedures. Test procedures, performance standards, and tolerances shall be prepared to establish that the equipment is adequately overhauled and ready for issue without qualifications. The procedures shall list all tools, TMDE, jigs, fixtures, and other support items required for the test in the initial setup information (Refer to 5.3.3). Operating instructions shall be prepared for special test equipment where necessary. Procedures shall be prepared for minor adjustments that can be done without disassembling equipment. Complete procedures shall be prepared for burn-in or run-in tests.

(4) Final painting, refinishing, and marking. Procedures shall be prepared for any final painting, refinishing, and marking that could not be done during the overhaul procedures. The materials and tools required to do the job shall be identified. Depot level maintenance shall include data plate replacement data. For data plates which require replacement, the type of material shall be indicated. Detailed preparation and attachment instructions shall be prepared. The instructions for stamping data plates shall include the initials of the facility performing the overhaul or modification, the contact number (if applicable), the date of overhaul or modification, the part number, and the total operating time since new (if applicable). The instructions shall specify the letter and figure sizes and indicate their placement (adjustment to manufacturer's data). The following statement shall be inserted.

"When sufficient space is not available on the existing data plate to add information, the plate shall be replaced and all pertinent data transferred to the new plate. Data shall not be stamped directly on any part, assembly, or item of equipment except when approved by the Government."

5.3.4.9.1.23 Preservation, packaging, and marking **(DMWR only) <ppm>**. The following instructions shall be prepared.

a. Packaging information. The following statement shall be included verbatim.

"Refer to the packaging segment of the Army Master Data File Retrieval Microform System (AMDF) file for detailed packaging information. If AMDF does not contain the information that you need, you must contact the AMC Packaging, Storage, and Containerization Center, Tobyhanna Army Depot, for packaging information."

b. Special instructions. Instructions shall be prepared for any special or unique preservation, packaging, or marking instructions that apply to the equipment. These instructions shall include warnings, cautions, or references concerning ESD, nuclear material, hazardous substances, special marking instructions, or any other instructions required that are not covered in the standard packaging and preservation information.

5.3.4.9.1.24 Overhaul and retirement schedule **(aircraft only) <orsch>**. This maintenance task shall include the following statement and associated table (**standard information**) and may include an introduction.

"**OVERHAUL AND RETIREMENT SCHEDULE**

Units of operating equipment that are to be overhauled or retired at the period specified are listed here. Unless otherwise specified in TM 1-1500-328-23, Aeronautical Equipment Maintenance Management Policies and Procedures, removal of equipment for overhaul may be accomplished at the inspection nearest the time when overhaul is due."

The overhaul and retirement schedule (Refer to figure 6) shall consist of the entries described below. The overhaul and retirement schedule may be prepared as a table.

a. Part name. The name of the part shall be listed. An asterisk (*) shall precede the part name if the part is an indentured subassembly.

b. Part number. The official part number of the part listed.

c. Overhaul interval hours. The maximum operating time allowed on the part before it is to be overhauled.

d. Overhaul interval notes. Any additional information required on the part's overhaul interval.

e. Retirement interval hours. Maximum operating time allowed on the part before it is removed and condemned.

f. Retirement interval notes. Any additional information required on the part's retirement interval.

5.3.4.9.1.25 Preparation for storage or shipment **<pss>**. As applicable, the following instructions shall be prepared.

a. Security procedures and special transportation requirements for sensitive items (security, terrorists, etc.).

b. Special preservation, packaging, packing, marking, ESD protective and control measures, and shipping instructions, including use of special design reusable containers.

c. Instructions on special use of corrosion-preventive compounds, moisture barriers, and desiccant materials.

d. Instructions for applying special identifying, shipping, and cautionary markings to shipping containers; including security classification, special temperature requirements, and shelf life.

e. Instructions will be provided by the proponent activity for placing equipment in, and for removing it from, administrative storage.

f. Procedures for proper handling, blocking, and bracing of basic load ammunition when being transported in trucks and other tactical vehicles.

g. Basic load storage, quantity-distance, class, and storage compatibility groupings, storage temperatures, stacking limits, and other pertinent storage requirements (for conventional and chemical ammunition only).

h. For aviation ground support equipment, a reference to TM 1-1500-204-23 for general technical information for preparation for storage or shipment.

5.3.4.9.1.26 Classification of defects **<ammo.defect>**. Procedures shall be prepared for performing visual inspection of ammunition/containers (pallets, boxes, etc.) and shall include classification and disposition of defective ammunition/containers.

5.3.4.9.1.27 Handling ammunition **<ammo.handling>**. Procedures shall be prepared for handling ammunition.

a. Unpacking **<ammo.unpacking>**. As a minimum, the following information shall be prepared.

(1) Any special sequence of action necessary to protect the ammunition.

(2) If a special design reusable container is involved for either the end item or components which are authorized for replacement, instructions shall be prepared to report or reenter the empty container through supply channels.

(3) Man-hour requirements and total man-hours required for unpacking the ammunition.

b. Packing **<ammo.packing>**. As a minimum, the following information shall be prepared.

(1) Any special sequence of action necessary to protect the ammunition.

(2) Instructions shall be prepared on how to package defective ammunition.

(3) Man-hour requirements and total man-hours required for packing the ammunition.

5.3.4.9.1.28 Ammunition markings **<ammo.markings>**. Instructions shall be prepared for marking ammunition and ammunition containers.

5.3.4.9.1.29 Procedures needed to activate ammunition, mine, etc. **<arm>**. Procedures shall be prepared for activation of ammunition, mines, etc.

5.3.4.10 General maintenance work packages <**gen.maintwp**>. These work packages shall contain common, general, or standard maintenance procedures (e.g., specific torque wrench usage, lockwire procedures, "O" ring seal installation, external power connections, etc.) applicable to other maintenance work packages contained within the TM that require the general maintenance procedures to complete the tasks. Maintenance tasks listed in 5.3.4.9.1 may be included, as applicable. These WPs may be referenced in other maintenance work packages.

5.3.4.11 Phased maintenance inspection work package **(aircraft phased maintenance checklist only) <pmi-cklistwp>** . Phased maintenance inspection data shall include the information described in 5.3.4.11.1 through 5.3.4.11.5.

5.3.4.11.1 Inspection area diagrams. Diagrams locating the inspection areas and the access doors and panels which require removal at various phased maintenance inspections of the aircraft shall be included. (Refer to figure 7 and 8).

5.3.4.11.2 Phased maintenance checklist. The following information shall be developed for the phased maintenance checklist.

a. The work package shall begin with the following note:

"**NOTE**

Prior to start of the Phased Maintenance Inspection, it is recommended that a pre-inspection maintenance test flight (MTF) be conducted. Accomplishment of the MTF shall be determined by the unit maintenance officer. The pre-inspection MTF should be conducted by a maintenance test pilot following a review of the aircraft forms and records and a briefing from the crew of the aircraft. The MTF is recommended to assess the aircraft performance and identify deficiencies that should be corrected while the aircraft is undergoing phased maintenance inspections."

b. The checklist shall consist of the following specfic types of data entries. For **paged-based TMs**, the checklist data shall be contained in a table.

(1) Phase number <**phaseno**>. The inspection phase number shall be entered by the person planning the phased inspection.

(2) Area name and number <**inspect-area**>. The following types of inspections shall be entered, as applicable:

(a) General inspection **<geninspec>** items specified by the acquiring activity.

(b) Aircraft area inspection **<areainspec>** items approved by the acquiring activity. List shall be a logical sequence requiring a minimum of time and motion on the part of the individual performing the inspection.

(c) Aircraft Power On Checks **<pwron-inspec>** as approved by the acquiring activity.

(d) Aircraft final inspection **<finalinspec**> requirements as specified by the acquiring activity.

(3) Aircraft serial number <**serialno**>. The aircraft serial number shall be entered by the person performing the inspection.

(4) Date <**date**>. The date the phased maintenance check was performed shall be entered by the person performing the inspection..

(5) Total hours this area <**totalhrs**>. The total hours it took to complete the specific type of inspection shall be entered by the person performing the inspection..

(6) Inspect phase number <**inspecphase**>. Enter the phase number or numbers at which the inspection requirement is to be accomplished. If the inspection shall be done at each phase, the word "ALL" shall be entered.

(7) Inspection requirements <**requiremnt**>. The inspection procedures shall be included in the order of performance for each aircraft inspection area as described in subparagraph (2) above.

(8) Status <**status**>. Status symbols defined in DA PAM 738-751 shall be entered. The status symbol of a fault discovered when performing an inspection requirement shall be entered by the person performing the inspection. If an inspection reveals no fault, a status symbol shall not be entered. The person correcting the fault shall place his last name initial over the status symbol. A red X or a circled red X symbol will not be initialed over until after the corrective action has been approved and signed of by a technical inspector or designated supervisor.

(9) Faults and/or remarks <**ident-faults**>. The person performing the inspection shall enter brief remarks which describe the conditions resulting from the inspection and which require corrective action. The initials of the person making the entry shall be entered immediately following the remarks. If no faults are found, no entry is necessary.

(10) Action taken <**actionreq**>. Brief remarks which describe the action to be taken to correct the fault shall be entered by the person that performed the inspection. If no faults are found, an appropriate statement shall be entered to indicate that the inspection was accomplished such as, "inspected and found OK". If an inspection is not applicable to the inspection phase being performed, "N/A" shall be entered.

(11) Initials <**initials**>. Initials of the person preforming the action to correct the indicated fault shall be entered.

5.3.4.11.3 MTF form and rotor smoothing record. When all required inspections have been accomplished and initialed in accordance with the above procedure, a daily inspection in accordance with the TM specified in the inspection checklist work package will be performed on the aircraft to permit performance of a maintenance test flight (MTF). The MTF shall be performed in accordance with the requirements of the applicable aircraft technical manuals and TM 1-1500-328-23 using the MTF form in the MTF technical manual. Œ

SUPERSEDES PAGE 32 OF MIL-STD-40051-4A

5.3.4.11.4 Final records check. After all corrective actions have been completed and following completion of the phased inspection, the Technical Inspector or designated supervisor shall verify that all applicable forms and records have been properly updated. All uncorrected faults shall be entered on DA Form 2408-13, prepared for that date or to the DA Form 2408-14. A Final Records Checklist (Refer to figure 20) shall be used to ensure forms and records have been inspected for completeness and accuracy prior to release of the aircraft from the phased maintenance inspection. The inspector verifying the final records check shall enter his initials adjacent to the indicated form or record on the Final Records Checklist. The initials entered shall be registered on the Signature Sheet adjacent to that person's signature.

5.3.4.11.5 Signature sheet. All personnel performing inspection and/or maintenance tasks shall place their signatures and initials on the signature sheet (Refer to figure 21). The purpose of the signature sheet is to provide a correlation between initials entered on the individual checklist sheets and the actual names of the personnel accomplishing these tasks.

5.3.4.12 Preventive maintenance services inspection work packages **(aircraft only) <pms-inspecwp>**.
A work package shall be developed for each specific inspection interval (i.e., daily, intermediate, periodic, 10 hour/14 day, 30 hr/42day, etc.), as applicable to the aircraft. Inspection checklists shall be divided by areas of the aircraft (i.e., nose, fuselage, tail, etc.). All items requiring inspection shall be listed in the logical sequence of inspection that would require a minimum of time and motion on the part of the individual performing the inspection. For **paged-based TMs**, the checklist data shall be contained in a table (Refer to figure 9).

a. Power On and Power Off inspection requirements shall be separated so that power will only have to be applied to the aircraft one time during the entire inspection. The Power On items shall be grouped together under the heading "Power On" and shall follow after completion of the last Power Off requirement for the entire aircraft. Power On items shall fall in the proper numerical area and the first item number shall be the next higher number following the last item number of the Power Off requirement.

b. All communications and navigation electrical equipment inspections (black boxes, etc., which are the inspection and repair responsibility of avionics personnel) shall be included in a separate grouping following Power On inspection requirements and shall not appear in the normal inspection sequence.

NOTE

For avionics equipment inspection the following statement shall be included.

"Perform avionics inspections, check and test electrical equipment as required in TM 11-(*insert TM number*). DA Form 2404, Equipment Inspection and Worksheet, shall also be used to record results of inspections by avionics personnel."

c. The requirements contained in 5.3.4.12.1 through 5.3.4.12.3 apply to all inspection interval work packages, as applicable. For each major aircraft area the following inspection data entries shall be included.

(1) Sequence Number. Each inspection shall be assigned a sequence number and, if applicable, an area location number.

(2) Item and Procedure. Enter the area of the aircraft to be inspected and all procedures required to perform each of the required inspections. When an inspection item is not to be performed during each inspection, the interval/frequency shall be stated within in the procedure (i.e., perform only every 2nd inspection).

(3) Worktime. The time it took to perform each of the inspection procedures shall be entered by the person performing the inspection.

(4) Inspection Total Work Time. The total time it took to perform the entire inspection interval (i.e., daily, intermediate, periodic, etc.) Shall be entered by the person performing the inspection.

5.3.4.12.1 Mandatory safety-of-flight inspection items. Mandatory safety-of-flight inspection items shall be highlighted. Refer to MIL-STD-40051A for methods of highlighting mandatory safety-of-flight inspection items.

5.3.4.12.2 Area diagram. Area diagram of the aircraft, showing sequences for inspection by area shall be included. The area identified shall include all surfaces, material, components and equipment pertaining to that specific location (Refer to figure 10).

5.3.4.12.3 Standard checklist statements. The following statements shall be included in the applicable inspection section and in proper sequence.

a. The first item of each inspection for each aircraft shall read: "Inspect aircraft forms and records for recorded discrepancies (DA PAM 738-750, Functional User's Manual for the Army Maintenance Management System (TAMMS))."

b. One of the last items in each preventive maintenance services work package shall be the lubrication requirements and shall be entered as follows.

"**LUBRICATION**

All areas. Lubricate in accordance with lubrication chart contained in TM 55-(insert TM number)".

c. Include the following statements, as applicable:

(1) Windshields and windows for cleanliness.

(2) Tire for proper pressure (visual), no cuts, blisters or slippage.

(3) Pitot tubes and static ports for freedom of obstructions and cleanliness.

(4) Portable fire extinguisher for broken or missing seal, pressure indicator in green, and extinguisher and brackets secure. Fixed fire extinguisher for accessibility, broken, or missing seal, and extinguisher and bracket for security.

(5) First aid kits for designated location, presence of inspection date tag, condition of seal, and security.

(6) All visible and all accessible electrical wiring for chafing, or damaged insulation and for security of connections.

(7) Battery for leakage and security (nicad and lead acid). Battery compartment interior for cleanliness and corrosion. Battery and connections for security, cleanliness and corrosion. Battery vent for obstructions, proper positioning.

(8) Instrument gage markings for accuracy and legibility; all gage lens for cracks, cleanliness, looseness, and slippage.

(9) Static discharge wicks for overall length of 6 inches maximum and 1 inch minimum exposed wick beyond plastic sheath.

(10) Static discharge ground for condition and security.

d. Include the following statements as applicable in the intermediate inspection requirements. If the intermediate inspection is not required, the inspections listed below shall be included as periodic inspection requirements as determined by the acquiring activity.

(1) 2nd - Compass correction card for availability and legibility.

(2) 2nd - Safety belts and shoulder harness for damage, corrosion, cuts, fraying and security.

(3) 2nd - Inertial reels for damage, security, and positive locking and unlocking.

(4) 2nd - Seats for damage, security, and positive movement and locking in all positions.

(5) Every intermediate inspection - First aid kits for completeness of side pocket contents, and legible identification markings.

(6) 2nd Battery - (nicad and lead acid) for leakage. Battery compartment interior for cleanliness and corrosion. Battery and connections for security, cleanliness and corrosion. Battery vent for obstructions, proper positioning.

e. Include the following statements as applicable in the periodic inspection requirements.

(1) Spark plugs (fine wire), remove and inspect.

(2) Instrument range markings for accuracy and legibility; all gage lens for cracks, cleanliness, looseness, and slippage.

(3) Static discharge wicks for overall length of 6 inches maximum and 1 inch minimum exposed wick beyond plastic sheath.

(4) Static discharge ground for condition and security.

(5) Spark plugs (massive electrode), remove and inspect.

(6) 2nd - Starter brushes for wear (specify) and freedom of movement in brush holder. Brush leads for deterioration or evidence of chafing. Commutator for evidence of arcing and presence of oil or metal particles. Electrical connections for security.

(7) Magneto breaker compartment for cleanliness. Breaker points for pitting, ventilator plugs or screens for cleanliness, and cam wiper for lubrication.

(8) Pitot and static system for absence of foreign material and moisture.

(9) Fixed fire extinguishers for accessibility, broken or missing seal, and extinguisher and bracket for security. Weight check cylinder, less valve.

f. Include the following statement as the last item of the checklist.

"Forms and Records Completion: Ensure that all entries on forms, records and work sheets have been completed or updated and new forms initiated as required (DA PAM 738-750, Functional User's Manual for the Army Maintenance Management System (TAMMS))."

5.3.4.13 Overhaul inspection procedures (OIP) work package **<oipwp>**(**DMWRs only**). Unless otherwise specified by the acquiring activity, OIPs shall be prepared for items that have parts with specific characteristics, wear limits, specified performance requirements, or fatigue characteristics or tolerances. A separate work package shall be provided for each item containing such parts. Within each work package, a separate OIP shall be provided for each part of the item that requires a critical inspection. The OIP shall contain the characteristics being inspected for, inspection methods, and the acceptance/reject criteria that must be met. For characteristics having a major quality assurance effect, the acronym "QA" shall be placed immediately before the characteristic to which it applies. An illustration shall accompany the OIP. A reference letter may be included in the OIP to locate the critical inspection characteristics of the parts on the illustrations. The OIPs may be contained in a table or a list (Refer to figure 4). References to these OIP work packages shall be included within the applicable maintenance procedural step (i.e., disassembly, reassembly, testing, etc.) or preshop analysis procedural step where they apply.

5.3.4.14 Illustrated list of manufactured items work package **(-20/AVUM level or above only) <manuwp>**. This work package shall identify and include technical information for each item authorized to be manufactured or fabricated by unit/AVUM, direct support/AVIM, general support maintenance or depot personnel (e.g., all "MO", "MF", "MH", and "MD" source coded items). The work package shall include the data described in 5.3.4.14.1 through 5.3.4.14.3.

5.3.4.14.1 Introduction for illustrated list of manufactured items work package **(-20/AVUM level or above only) <intro>**. For **paged-based TMs only**, the following introduction (text below within the quotation marks) shall be prepared and included verbatim. For **IETMs**, the introduction is not required.

"**ILLUSTRATED LIST OF MANUFACTURED ITEMS**

INTRODUCTION

Scope

This work package includes complete instructions for making items authorized to be manufactured or fabricated at the *(enter applicable maintenance level).*

How to Use the Index of Manufactured Items

A part number index in alphanumeric order is provided for cross-referencing the part number of the item to be manufactured to the page which covers fabrication criteria.

Explanation of the Illustrations of Manufactured Items

All instructions needed by maintenance personnel to manufacture the item are included on the illustrations. *(When applicable, a reference to the associated RPSTL TM or RPSTL work package shall be entered here.)* All bulk materials needed for manufacture of an item are listed by part number or specification number in a tabular list on the illustration."

5.3.4.14.2 Index of manufactured items **<manuindx>**. A index of part numbers or drawing numbers shall be prepared which lists part numbers **<partno>** and/or drawing numbers **<dwgno>**, in alphanumeric order, along with the name of the part **<name>** for all items illustrated in this work package. If applicable, the illustration figure number **<figno>** containing the manufacturing data shall be included.

5.3.4.14.3 Illustrations of manufactured items. The following information shall be prepared:

a. Illustrations shall be prepared which contain sufficient views to portray all features of the item. (Refer to figure 11.)

b. All instructions (explanatory text and list of bulk materials) needed by maintenance personnel to manufacture the item (refer to figure 11) shall supplement the illustrations and shall contain the following data.

(1) All dimensional, location, and processing instructions needed to manufacture the item shall be included (e.g., 30-in. long, top surface, primer coating).

(2) A description of the item to be manufactured, including the P/N and name.

(3) A list of bulk materials needed to manufacture the item shall be prepared. The list of bulk materials shall consist of the P/N, NSN, or specification number of the raw bulk material to be used in manufacture of the item and shall cite the technical characteristics (i.e., standards, specifications, conditions, dimensions, and any other pertinent data).

(4) When applicable, reference shall be made to the associated parts information (PI), RPSTL TM or RPSTL work package (for combined TMs).

5.3.4.15 Torque limits work package **(-20/AVUM level or above only) <torquewp>**. Information shall be prepared to provide applicable torque values **<torqueval>** (expressed in lb-ft or lb-in. terms), data as to bolt grade markings and their proper identification, and specific torque sequencing requirements. The torque limits work package may begin with an introduction **<intro>**. Specific instructions such as torque limits for dry and wet fasteners, fastener sizes and thread patterns, etc., shall be prepared to follow the introduction. Refer to figure 12 for an example of the type of information presented in a torque limits work package.

5.3.4.16 Ammunition marking information work package **<ammo.markingwp>**. This work package shall be prepared to provide applicable information on ammunition marking **<ammo.markings>**, classification, identification **<ammotype>**, care and handling **<ammo.handling>**, preservation, transportation, authorized rounds, preparation for firing, fuzes, and packing **<ammo.packing>**. Reusable original packaging and containers shall be identified for return or temporary storage of ammunition in its original configuration. Information on classifying, identifying, caring for, handling, etc., nonammunition Class V items shall be prepared, when applicable. Individual paragraphs shall be prepared for each ammunition type/classification.

5.3.4.17 Foreign ammunition (NATO) work package **<natowp>**. A work package to describe foreign ammunition shall be prepared when applicable. The requirements of 5.3.4.16 shall apply.

5.3.4.18 Aircraft inventory master guide work package **(aircraft only) <inventorywp>**. Information shall be prepared on standard inventory procedures to allow determination of inventoriable items of installed and loose equipment authorized and required by the specific aircraft in performance of its mission. The inventory data described in 5.3.4.18.1 through 5.3.4.18.4 shall be included.

5.3.4.18.1 Introduction **<intro>**. A short explanation of the scope and purpose of the work package shall be prepared. Information pertaining to necessary steps to ensure the list is accurate, exact, and complete (e.g., research of authorized changes, Modification Work Orders (MWOs), additions/deletions for special mission requirements) shall be included. The introduction shall include a reference to DA PAM 738-751 for applicable forms and records.

5.3.4.18.2 Security **<security>**. It shall be stated here that aircraft inventory records should be unclassified but that any classification of the contents, if necessary, should be in accordance with the existing security regulations.

5.3.4.18.3 Inventoriable items **<inventoriable>**. The selection of inventoriable items to be listed is to be without regard to the agency (governmental or contractual) furnishing the items.

a. Items to be listed are as follows.

(1) Items essential to the execution of the designated mission of the aircraft, such as electronic, photographic, armament, special mission instruments, and safety and comfort equipment.

(2) Loose equipment delivered with the aircraft and items subject to pilferage or readily converted to personal use.

(3) Modification kits which are reissued or distributed to using organizations for installation and which are not immediately placed in use. These shall be recorded on the affected aircraft's DA Form 2408-17, Aircraft Inventory Record, and identified as loose equipment until modification is completed.

(4) Equipment required for operation in a specific environment.

b. Items to be excluded are as follows.

(1) Nonaccountable items coded as expendable in the applicable stock lists.

(2) Personal issue or items furnished on unit allowance or other authority.

(3) Items or components considered as basic or integral parts of the airframe or basic aircraft, such as engines, propellers, wheels, and standard instruments.

(4) Equipment publications, checklists, and aircraft forms.

5.3.4.18.4 Periods of inventory **<prdinv>**. The following text shall be included verbatum.

"**PERIODS OF INVENTORY**

Inventoriable items shall be checked against the Aircraft Inventory Record, DA Form 2408-17, at the following periods:

1. Upon receipt.

2. Prior to transfer of the aircraft to another organization.

3. Upon placing aircraft in storage and upon removal from storage. Aircraft need not be inventoried while in storage.

4. Twelve months after last inventory."

5.3.4.19 Storage of aircraft work package **(aircraft only) <storagewp>**. The data described in 5.3.4.19.1 and 5.3.4.19.2 shall be included.

5.3.4.19.1 General information for storage of aircraft work package **(aircraft only) <geninfo>**. The following text shall included verbatim.

"**STORAGE OF AIRCRAFT**

GENERAL INFORMATION

Components Involved in an Accident

Any component removed for reason of accident shall not be preserved, but shall be shipped in the same condition it was in after the accident.

Categories of Storage

1. Flyable storage — no time limit.

2. Short term (administrative storage) — 1 to 45 days.

3. Intermediate storage — 46 to 180 days."

5.3.4.19.2 Flyable storage **<flyable>**, short term storage **<short>**, and intermediate storage **<intermediate>**.

a. A general discussion shall be prepared for each category of aircraft storage, to include considerations for selection of the appropriate category (e.g., ground operation, motoring of engines, and other required maintenance for which personnel and materials are needed) and steps to be taken for care of the aircraft during exceptionally wet weather.

b. All essential information for each category of aircraft storage shall be prepared to include all procedures for preparing the complete aircraft for storage and removal from storage, excluding any information on when or why the aircraft are stored. Each category of storage shall make reference to inspection documents and inspection procedures to be conducted before, during, and after storage.

5.3.4.20 Weighing and loading (AVIM) work package **(aircraft only) <wtloadwp>**. This work package shall provide description, information, and procedures for aircraft weighing, balancing, and loading. The data described in 5.3.4.20.1 through 5.3.4.20.3 shall be included.

5.3.4.20.1 General information **<geninfo>**. The following text shall be included verbatim.

"WEIGHING AND LOADING AVIM

GENERAL INFORMATION

Scope

This work package contains description, information, and procedures for aircraft weighing and loading. This information replaces the Chart E (Loading Data and Special Weighing Instructions) placed in the individual aircraft weight and balance files by the aircraft manufacturer. Chart E in the aircraft file will no longer be required."

5.3.4.20.2 Weighing information <**formchart**>. Instructions for preparing the aircraft, weighing the aircraft in the basic weight condition, performing calculations, and using and recording data on DD Form 365-1 (Basic Weight Checklist) and DD Form 365-2 (Aircraft Weighing Record) shall be included. (Refer to figure 13 for an example of DD Form 365-2.) Instructions shall include initial setup requirements, procedures for positioning the aircraft in the weighing area, and assembly of the aircraft weighing equipment. Illustrations shall be prepared to support the text, including a two view chart diagram. (Refer to figure 14.)

5.3.4.20.3 Loading information <**weightinst**>. Descriptions and instructions shall be prepared for aircraft loading, and computing weight and balance information. Sufficient information and data shall be provided so that an aviator, knowing the basic weight and moment of the aircraft, can compute any combination of weight and balance using the prescribed charts and forms. Reference shall be made to AR-93-3 (Aviation: General Provisions, Training, Standardization, and Resource Management), DA PAM 738-751 and TM 55-1500-342-23 for additional information governing weight and balance of aircraft, forms, and records. Data shall include fundamental principles of loading. An illustration of aircraft compartments and stations shall be included. Reference shall be made to DD Form 365-1 for a more complete listing of compartments and equipment that comprise the basic weight of the aircraft. Loading information shall include weight and balance characteristics, center of gravity limits, weight / balance and loading, and weight and moment tables for load items such as crew, fuel, cargo, and armament.

5.3.4.21 Depot mobilization requirements work package **(DMWR only) <mobilwp>**. When specified and provided by the acquiring activity, the modifications, deletions, or additions to the preshop analysis or overhaul procedures required during mobilization shall be included in this WP. The data described in 5.3.4.21.1 and 5.3.4.21.2 shall be included.

5.3.4.21.1 Introduction for depot mobilization requirements work package **(DMWR only) <intro>**. The following text shall be included verbatim.

"**DEPOT MOBILIZATION REQUIREMENTS**

INTRODUCTION

Scope

The purpose of this work package is to streamline and accelerate the overhaul process during the mobilization of the depot.

Explanation of Mobilization Requirements

The mobilization requirements include a list of instructions for modifying preshop analysis and/or overhaul procedures. The pertinent procedures to be modified are referred to by page and work package number, followed by the action to be taken."

5.3.4.21.2 Mobilization requirements **<mobilreq>**. Mobilization requirements consist of a list of actions that shall be in effect during depot mobilization. The work packages that are modified by these actions shall be noted. For **page-based TMs only**, this data can be in the form of **standard information <mobiltab>**. (Refer to figure 15.) For **ITEMs only**, the mobilization action shall be listed and linked to the specific step in the applicable task.

5.3.4.22 QA requirements work package **(DMWR only) <qawp>**. This work package shall include the data described in 5.3.4.22.1 through 5.3.4.22.7

5.3.4.22.1 Statement of responsibility **<responsibility>**. The following information shall be included.

> "**STATEMENT OF RESPONSIBILITY**
>
> The depot/contractor is responsible for complying with the quality assurance requirements contained in this work package and in accordance with ISO 9000 Series standards or equivelent. The commodity manager reserves the right to perform inspections or make changes that ensure the depot work being done meets the quality standards of the DMWR and preserves the inherent reliability of the item."

5.3.4.22.2 Definitions **<def>**. Definitions shall be prepared for all QA terms extensively used in the Depot Maintenance Work Requirement (DMWR).

5.3.4.22.3 Special requirements for inspection tools and equipment **<specialreq>**. Any special requirements for the maintenance and calibration of tools and test equipment used for QA inspections shall be listed.

5.3.4.22.4 Certification requirements **<certreq>**. Any certification or licensing requirements for processes, procedures, materials, equipment, or personnel skills shall be listed. The list shall include appropriate standards, specifications, regulations, or laws that apply. The list shall reference the text in the DMWR where there is a requirement for a soldering, welding, or magnetic particle inspection certification, radioactive substance, or test driver licenses.

REPRINTED WITHOUT CHANGE

5.3.4.22.5 In-process inspections **<inprocess>**. The following statement shall be included.

"**IN-PROCESS INSPECTIONS**

In-process quality assurance inspections are contained throughout the overhaul procedures of this DMWR. These inspections are immediately followed by a statement such as “QA check” to identify them, and they are the minimum inspections required. Additional quality assurance inspections may be established by the depot or the commodity manager."

5.3.4.22.6 Acceptance inspections **<acceptance>**. The following statement shall be included.

"**ACCEPTANCE INSPECTIONS**

Items overhauled in accordance with this DMWR will be accepted based on the following criteria:

1. Conformance to quality of material requirements.

2. Conformance to all in-process quality assurance inspections.

3. Conformance to all final assembly testing requirements.

4. Conformance to the preservation, packaging, and marking requirements."

5.3.4.22.7 First article inspection **<first>**. When applicable, first article inspection/test shall be prepared for the DMWR in accordance with ISO 9000 Series standards or equivelent.

5.3.4.23 Wiring diagrams work package **<wiringwp> (-20/AVUM level or above only)**. This work package shall include wiring and cable provisions contained in the equipment/end item, including all systems or equipment which can be installed or removed later (e.g., mission-related systems/equipment). Applicability of diagrams shall be explained in relation to equipment configuration. At a minimum, the wiring data described in 5.3.4.23.1 through 5.3.4.23.4 shall be included.

5.3.4.23.1 Introduction **<intro>**. Information shall be prepared to include the scope of the work package. A statement shall be included explaining that wiring diagrams and essential wiring information are provided for all electrical and electronic systems and circuits.

5.3.4.23.2 Wire identification **<wireid>**. Identification of wires by number shall be explained. A list of circuit designators and a wire identification diagram shall be prepared.

5.3.4.23.3 Abbreviations **<abbrev>**. A statement shall be prepared that abbreviations are in accordance with ASME Y14.38, except when the abbreviation stands for a marking actually found in the equipment. Œ

5.3.4.23.4 Wiring diagrams **<wiringdiag>**. Wiring diagrams shall be prepared for all electrical and electronic systems and circuits.

6. NOTES.

The notes in section 6 of MIL-STD-40051A apply to this Part.

SUPERSEDES PAGE 42 OF MIL-STD-40051-4A

SEMI-ANNUAL (1500 MILE) PMCS MANDATORY REPLACEMENT PARTS LIST (AO/A1)

ITEM NO.	PART NUMBER	NSN	NOMENCLATURE	QTY
1	D5-19-2353	4240-01-026-3112	PRECLEANER AND PART (A1 ONLY)	01
2	MS24665-285	5315-01-061-2060	PIN, COTTER	01
3	MS35333-42	5310-00-595-7237	WASHER, LOCK	03
4	MS35338-43	5310-00-045-3296	WASHER, LOCK	01
5	MS35338-44	5310-00-582-5965	WASHER, LOCK	16
6	MS35338-46	5310-00-004-5033	WASHER, LOCK	09
7	MS51922-1	5310-00-088-1251	NUT, SELF-LOCKING	04
8	MS51922-17	5310-00-087-4652	NUT, SELF-LOCKING	17
9	11628247	5330-01-109-1925	GASKET	02
10	12294872	5310-01-107-3356	WASHER, FLAT	02
11	2585163-57	5306-00-163-2850	BOLT, SELF-LOCKING	01

ANNUAL (3000 MILE) PMCS MANDATORY REPLACEMENT PARTS LIST (A0/A1)

ITEM NO.	PART NUMBER	NSN	NOMENCLATURE	QTY
1	D5-19-2353	4240-01-026-3112	PRECLEANER AND PART (A1 ONLY)	01
2	MS24665-283	5315-00-842-3044	PIN, COTTER	02
3	MS24665-285	5315-01-061-2060	PIN, COTTER	01
4	MS35333-42	5310-00-595-7237	WASHER, LOCK	03
5	MS35338-43	5310-00-045-3296	WASHER, LOCK	01
6	MS35338-44	5310-00-582-5965	WASHER, LOCK	16
7	MS35338-46	5310-00-004-5033	WASHER, LOCK	09
8	MS51922-1	5310-00-088-1251	NUT, SELF-LOCKING	08
9	MS51922-13	5310-00-0984-3807	NUT, SELF-LOCKING	02
10	MS51922-17	5310-00-087-4652	NUT, SELF-LOCKING	17
11	MS51922-21	5310-00-959-1488	NUT, SELF-LOCKING	01
12	MS51922-5	5310-09-959-7600	NUT, SELF-LOCKING	01
13	11628247	5330-01-109-1925	GASKET	02
14	11664669	2910-00-152-2033	FILTER ELEMENT, FLUID	01
15	12294872	5310-01-107-3356	WASHER, FLAT	02
16	254608S	5330-01-050-2624	GASKET	02
17	255815S	5330-01-328-9920	GASKET	02
18	2585163-57	5306-00-163-2850	BOLT, SELF-LOCKING	01
19	3302180S	5330-01-328-9921	GASKET	02

FIGURE 1. Example of a PMCS mandatory replacement parts list

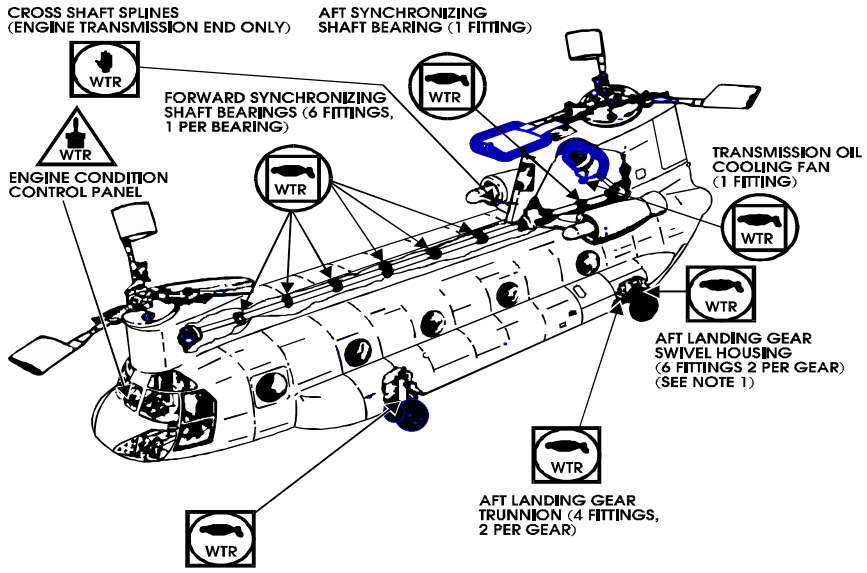

NOTES

1. CODE C AND D, X.1, AND 63,7900 THRU 63-7921 WITHOUT HIGH FLOTATION LANDING GEAR HAVE 4 FITTINGS (2 PER GEAR).
2. LUBRICATION INTERVAL SHOWN IS FOR AVERAGE CONDITIONS, MORE FREQUENT LUBRICATION MAY BE NECESSARY UNDER EXTREMELY DUSTY CONDITIONS.

TABLE OF LUBRICANTS		
IDENTI-FICATION LETTER	SPECIFICATION	TYPE OF LUBRICANT
WTR	MIL-G-81322B (C221)	GREASE, AIRCRAFT, GENERAL PURPOSE, WIDE TEMPERATURE RANGE

SYMBOLS	FREQUENCY	METHOD OF APPLICATION
	25 HOURS	GREASE GUN
	100 HOURS	BRUSH
	500 HOURS	HAND

FIGURE 2. Example of a lubrication chart.

Requirements for XXX System

System	MTBF	MTR	A_o
Track	500 mi	30 min	0.89
Engine	170 hr	43 min	0.92
Hull	1,000 mi	80 min	0.86
Radio	400 hr	10 min	0.95
Night Sight	145 hr	10 min	0.88
Gun Tube	10,000 rds	45 min	0.95

Maintenance Ratio for XXX System 0.35

Unit	DS	GS	Depot
0.10	0.05	0.08	0.07

EXAMPLE OF TABULAR RAM DATA

Requirements for XXX System

Maintainability

When maintenance procedures shown in the technical manuals are followed, the mature maintainability data are as follows:

1. Mean Operator Preventive Maintenance Time shall not exceed 0.25 man-hours per mission. This time shall not be included in organizational preventive maintenance time.

2. Maximum operator Corrective Maintenance Time shall not exceed 1.00 man-hours per mission without being classified as a mission failure.

3. The ratio of total corrective and organizational preventive maintenance man-hours to operating hours shall not exceed 0.10.

4. The ratio of total organizational preventive maintenance man-hours to total operating hours shall not exceed 0.04.

5. The ratio of total corrective maintenance man-hours to operating hours shall not exceed 0.06.

6. Mean man-hours to perform a corrective maintenance action shall not exceed 2.5.

7. The Mean Time Between Corrective Maintenance Actions shall not be less than 150 operating hours.

8. The engine shall have an 80 percent probability of not requiring replacement in 20,000 miles of operation.

9. The gun tube shall have an 80 percent probability of not requiring replacement in 50,000 rounds of operation.

10. The track shall have a 92 percent probability of not requiring replacement in 5,450 miles of operation.

EXAMPLE OF NARRATIVE RAM DATA

FIGURE 3. Example of tabular and narrative reliability, availability, and maintainability data.

Table 2. Overhaul Inspection Procedures for Spur Gear (Item 5, fig 4).

QA REQ	NO.	REF LTR	CHARACTERISTIC	INSP METHOD	REQUISITE
	1		Serviceability	Visual/measure	Examine for nicks, gouges, burrs, and corrosion. Except for specific surfaces identified below repair damaged areas, 0.020 inch (0.508mm) or less deep, by blending.
Yes	2		Metal fatigue	Magnetic particle inspection	No fractures or cracks.
Yes	3	A	Tooth wear	Visual	No pitting, scuffing, scoring, metal flow, or wear steps allowed.
Yes	4	B	Journal wear	Measure	Minimum diameter, 0.9841 inch (24.99mm). Repair (WP 0052 00).

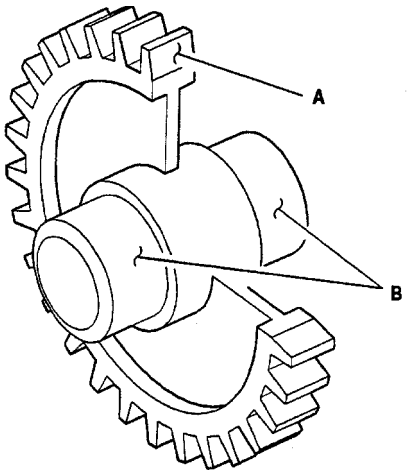

FIGURE 4. Example of an OIP table.

Table 2. Classification of Materiel Defects.

CATEGORIES OF DEFECTS/COMPONENTS AND DEFECTS	WP NO. OR TM WITH CORRECTIVE ACTION	INSPECTION METHODS AFTER CORRECTIVE ACTION	ACCEPTABLE QUALITY LEVEL
CRITICAL:			
1. Fuze not set on SAFE.	WP 0120 00	Visual	Fuze set on SAFE.
2. Fuze well liner missing.	WP 0120 00	Visual	Fuze well liner in place.
MINOR:			
1. Fuze stake missing.	WP 0120 00	Visual	Fuze stake replaced.
2. Supplementary charge spacer missing.	WP 0120 00	Visual	Supplementary charge spacer replaced.
3. Supplementary charge damaged.	WP 0120 00	Visual	Supplementary charge replaced.
4. Explosive on fuze well threads.	WP 0120 00	Visual	Fuze well threads without caked explosive.
5. Shear or twist pin above flush.	WP 0120 00	Visual	Shear or twist pin flush.

FIGURE 5. Example of a classification of material defect table.

PART NAME	PART NUMBER	OVERHAUL INTERVAL HOURS	OVERHAUL INTERVAL NOTES	RETIREMENT INTERVAL HOURS	RETIREMENT INTERVAL HOURS
Tail Rotor Strap Assembly	7-211421035-5			18,000	
	7-211421035-7			18,000	
Tail Rotor Blade Assembly	7-311422050-3			4,600	
	7-311422050-5			4,600	
	7-311422050-7			4,600	
	7-311422050-9			4,600	
Main Transmission Assembly	7-311310001-5	1,000		4,500	
	7-311310001-9			4,500	
	7-311310001-13	1,000		4,500	
	7-311310001-17			4,500	
	7-311310001-21	1,000		4,500	
	7-311310001-23			4,500	
	7-311310001-25	1,000		4,500	
	7-311310001-27			4,500	
	7-311310001-29	1,000		4,500	
	7-311310001-31	1,000		4,500	
	7-311310001-33			4,500	
	7-311310001-35			4,500	
	7-311310001-37			4,500	
	7-311310001-39			4,500	
*Clutch Assembly	7-311310003	1,000		4,500	
	7-311310003-3	1,000		4,500	
	7-311310003-7	1,000		4,500	
	7-311310003-9	1,000		4,500	
Main Rotor Drive Shaft	7-211350021			5,400	1
	7-211350021-3			5,400	1
Main Rotor Drive Plate	7-211310098-5			5,400	
	7-211310098-7			5,400	
	7-211310098-9			5,400	
	7-211310098-11			5,400	
Nose Gearbox Assembly, LH	7-311320001-3			4,500	
	7-311320001-5			4,500	
*Quill Shaft Assembly	7-211320093			4,500	
Nose Gearbox Assembly, RH	7-311320001-4			4,500	
	7-311320001-6			4,500	

FIGURE 6. Example of an overhaul and retirement schedule.

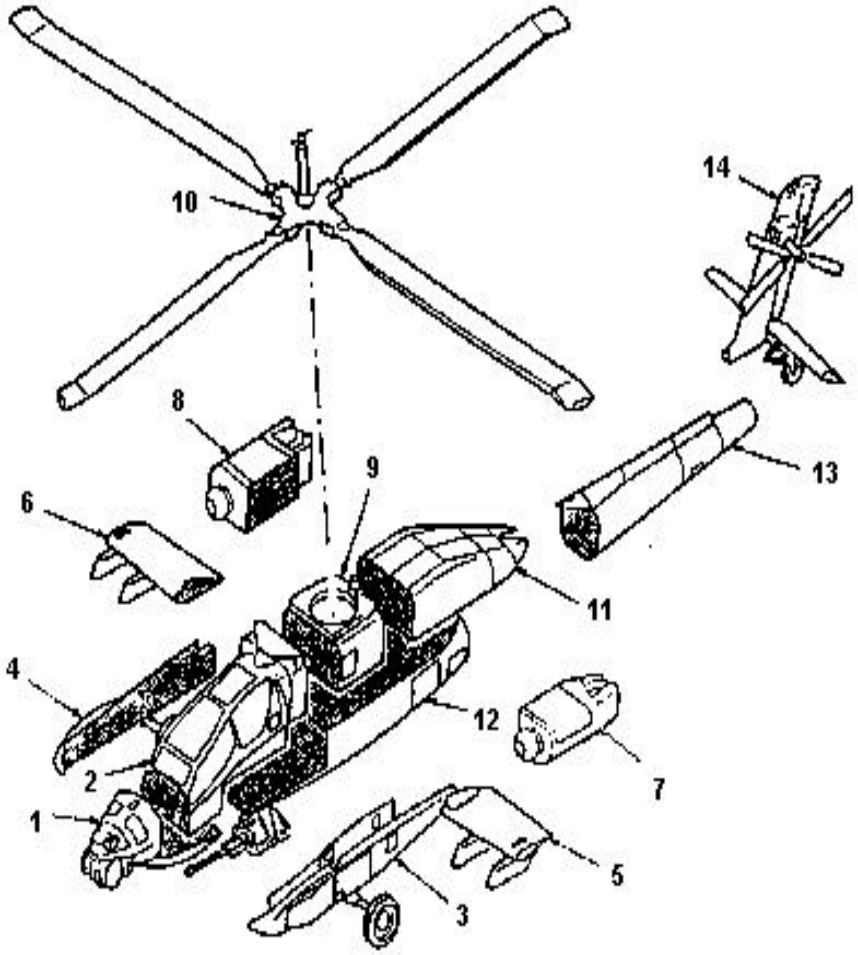

AREA NO.	AREA TITLE
1	FORWARD FUSELAGE
2	CREW STATIONS
3	LEFT FORWARD AVIONICS BAY AND MAIN LANDING GEAR
4	RIGHT FORWARD AVIONICS BAY AND MAIN LANDING GEAR
5	LEFT WING AND PYLONS
6	RIGHT WING AND PYLONS
7	LEFT ENGINE AND NOSE GEARBOX
8	RIGHT ENGINE AND NOSE GEARBOX
9	MAIN TRANSMISSION
10	MAIN ROTOR
11	AFT EQUIPMENT BAY
12	MID AND LOWER FUSELAGE
13	AFT FUSELAGE
14	EMPENNAGE, TAIL ROTOR AND TAIL LANDING GEAR

FIGURE 7. Example of an inspection area diagram.

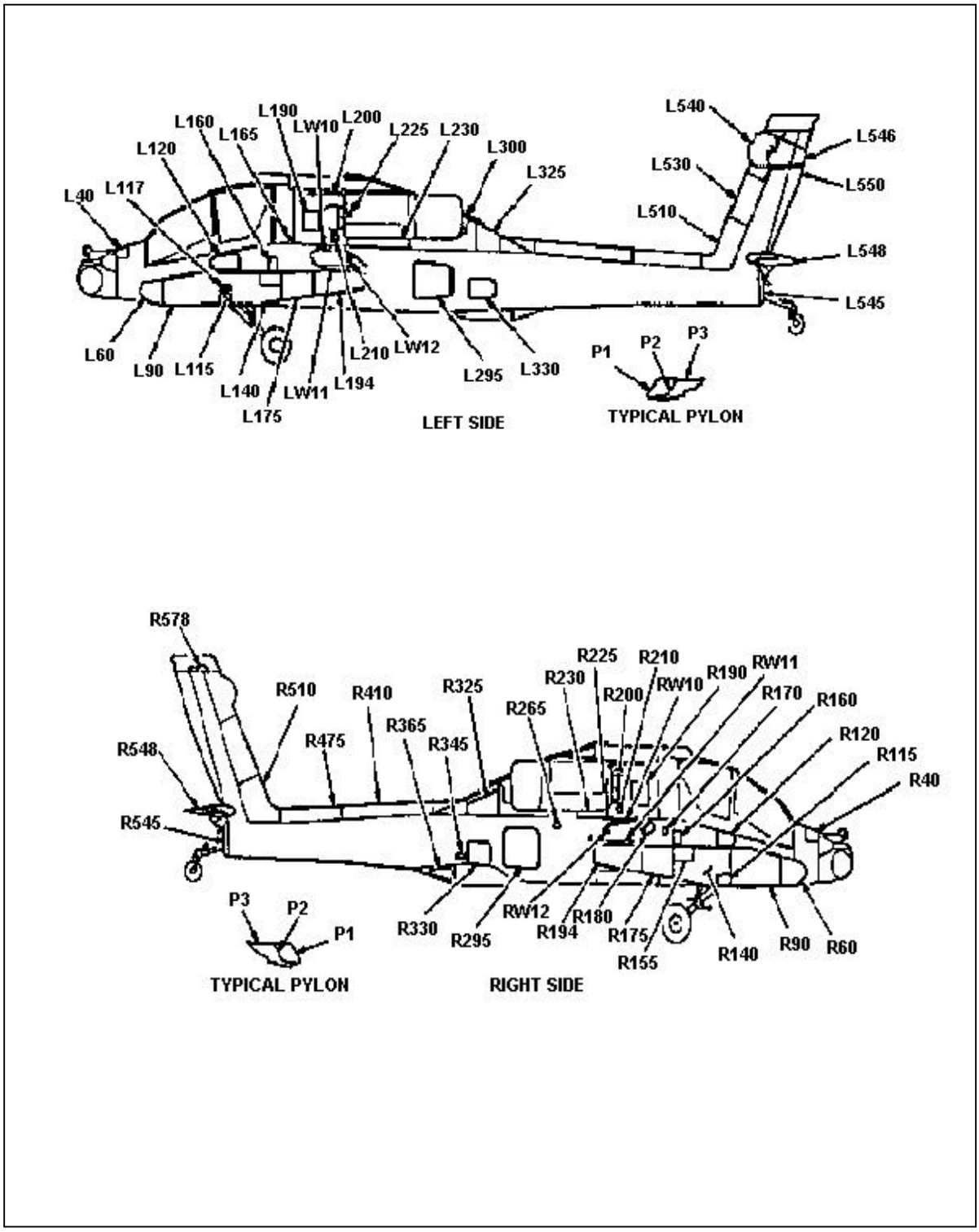

FIGURE 8. Example of inspection access provisions.

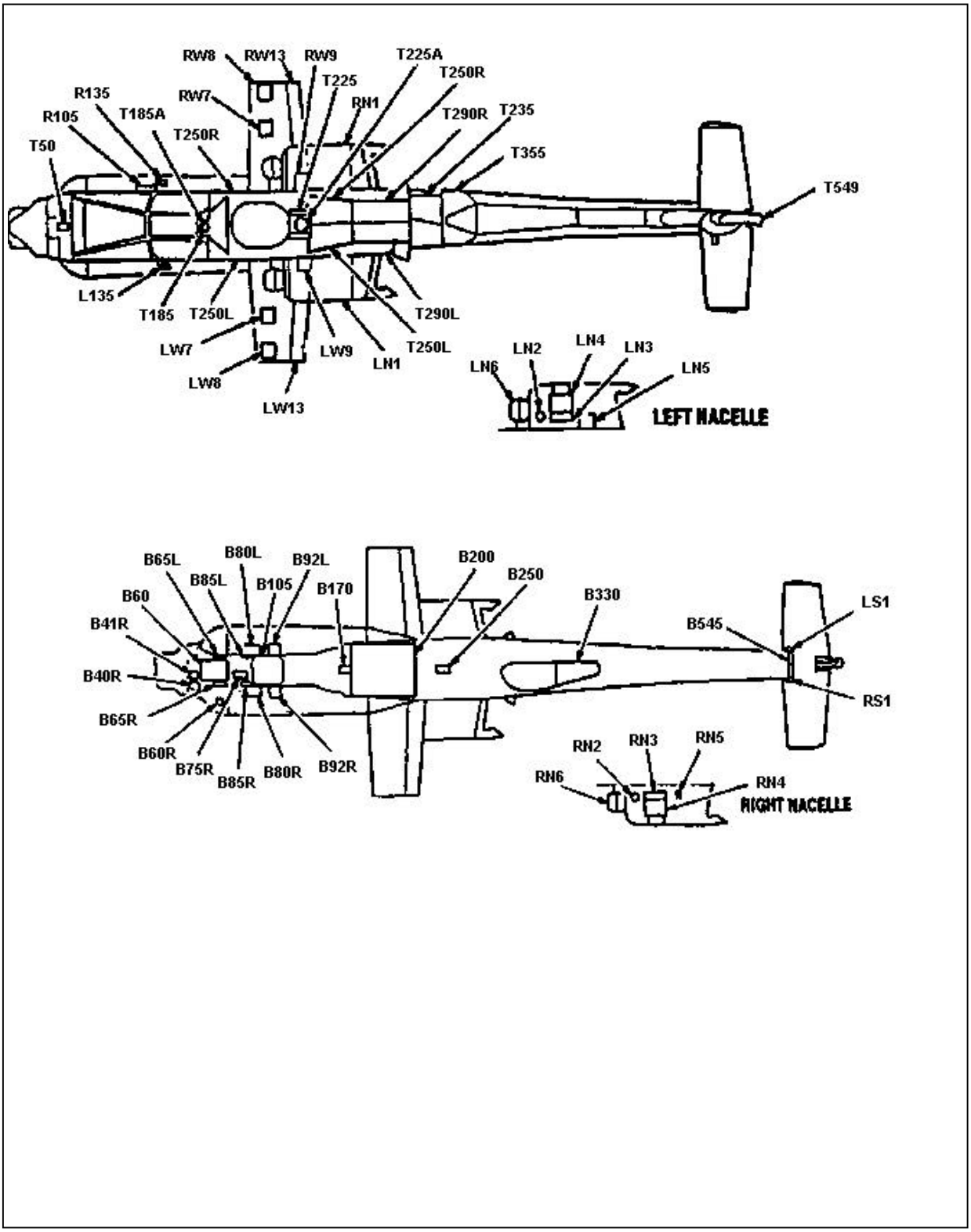

FIGURE 8. Example of inspection access provisions - Continued.

INSPECTION TOTAL WORK TIME D _____
I _____
P _____

Seq. No.	Item and Procedure	D	I	P	W/T
	NOSE AREA				
1.1	Aircraft forms and records for recorded discrepancies (TM 38-750).	X	X	X	
1.2	Nose section exterior for damage.	X	X	X	
1.3	Nose compartment interior for cleanliness, equipment for damage and loose connections, and door for secure latching.	X	X	X	
1.4	Pitot tube and static ports for obstructions and cleanliness.	X	X	X	
1.4.1	Disconnect pitot/static lines from instrument ports. Remove drain caps from moisture traps.			X	
1.4.2	Purge pitot/static system with clean dry air pressure (10 - 60 PSI). Reconnect lines and caps and inspect system for leaks utilizing instrument test set.			X	
1.5	Windshields and windows for cleanliness, scratches, and cracks.	X	X	X	
1.6	Test FAT gage (TM 55-1500-204-25/1).			X	

Seq. No.	Item and Procedure	D	I	P	W/T
2.6	First aid kits for designated location, presence of inspection date tag, broken or missing seal, legible identification markings, and security	X	X	X	
2.7	Seats and mission equipment securely installed or stowed. Copper safety wire on armored seat quick release for condition and security.	X	X	X	
2.7.1	Seats and mission equipment for damage, positive movement, and locking. Safety belts and shoulder harnesses for damage, corrosion, cuts, fraying, and security. Inertia reels for positive locking and unlocking.		2nd	X	
2.7.2	Inspect armored seats for positive recline movement.			X	
2.8	All instruments for cleanliness, damage, and presence of slippage marks on gage lens.	X	X	X	
2.8.1	All instrument range markings for accuracy and legibility. All gage lens for looseness and slippage.			X	
2.9	Deleted				

FIGURE 9. Example of preventive maintenance services.

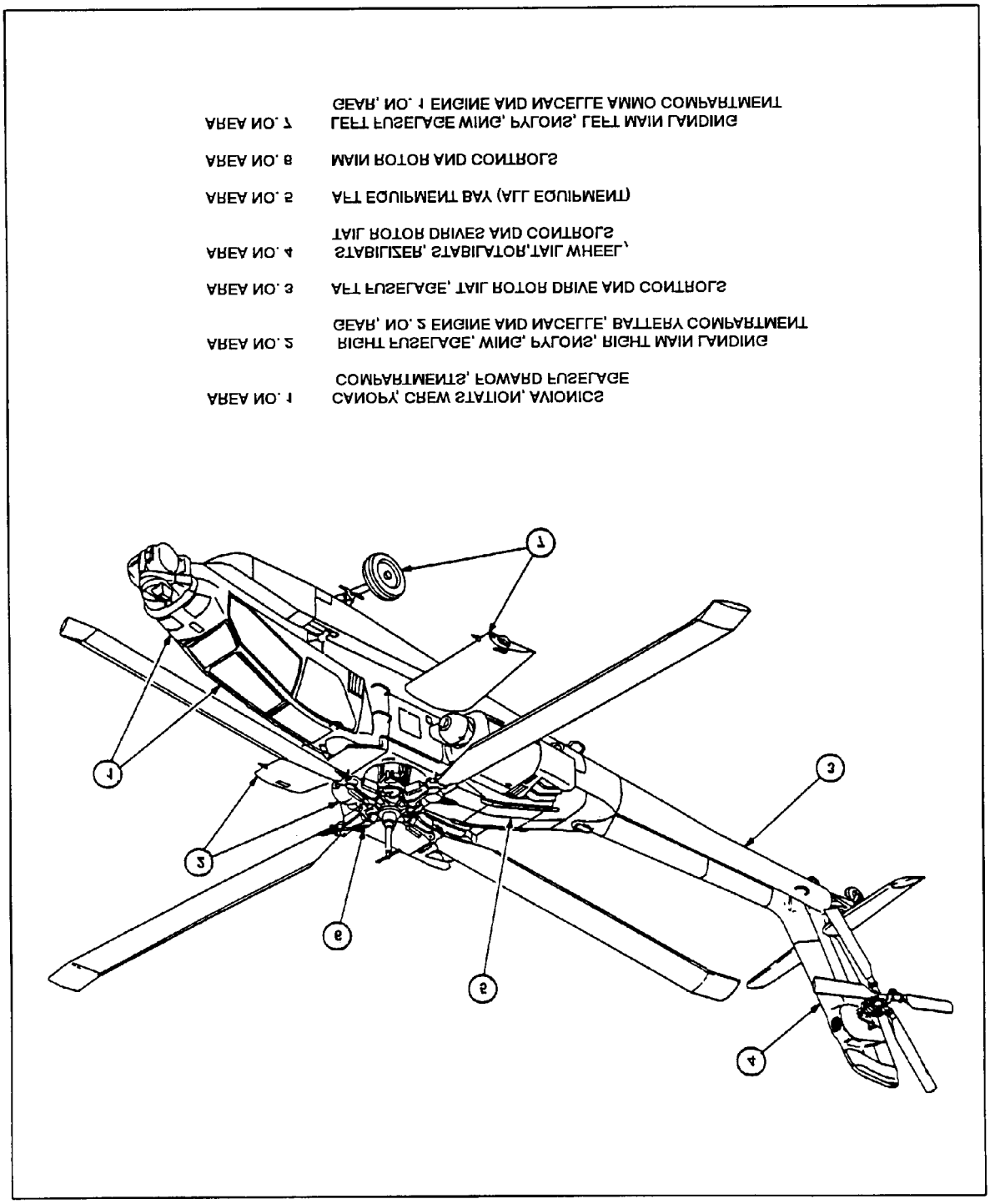

FIGURE 10. Example of an area diagram.

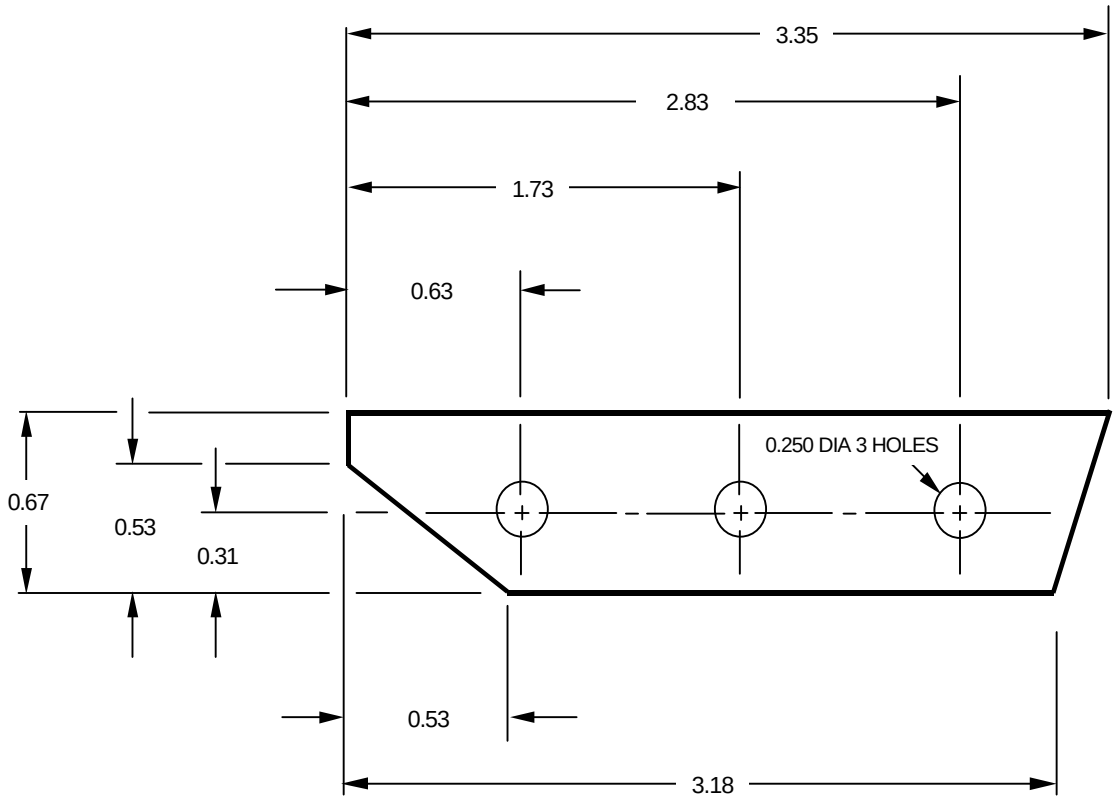

NOTES:

SHIM, BLADE-MAKE FROM AL-ALY SHEET 2024-T3, 0.016 THICK, QQ-A-250/5, NSN 6635-00-232-0543

FINISH- CHEMICALLY FILM TREAT PER MIL-C-5541 CLASS 1A

ALL DIMENSIONS ARE IN INCHES

Shim, Blade P/N 366-83019-5

FIGURE 11. Example of an illustrated list of manufactured items.

TORQUE LIMITS

TORQUE TABLES

How To Use Torque Tables

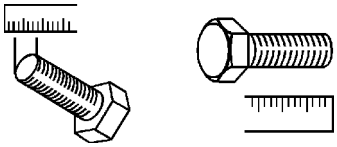

1. Measure the diameter of the screw you are installing.

2. Count the number of threads per inch or use a pitch grade.

3. Under the heading SIZE, look down the left-hand column until you find the diameter of the screw you are installing. (There will usually be two lines beginning with the same size.)

4. In the second column under SIZE, find the numbers of threads per inch that matches the number of threads you counted in step 2. (Not required for metric screws.)

CAPSCREW HEAD MARKINGS

NOTE

Manufacture's marks may vary. Standard are all SAE Grade 5 (3-Line). Metric screws are of three grades: 8.8, 10.9, and 12.9 Grades and manufacturer's marks appear on the screw head.

5. To find the grade screw you are installing, match the markings on the head to the correct picture of CAPSCREW HEAD MARKINGS in the illustration preceding the torque table.

FIGURE 12. Example of torque limits data.

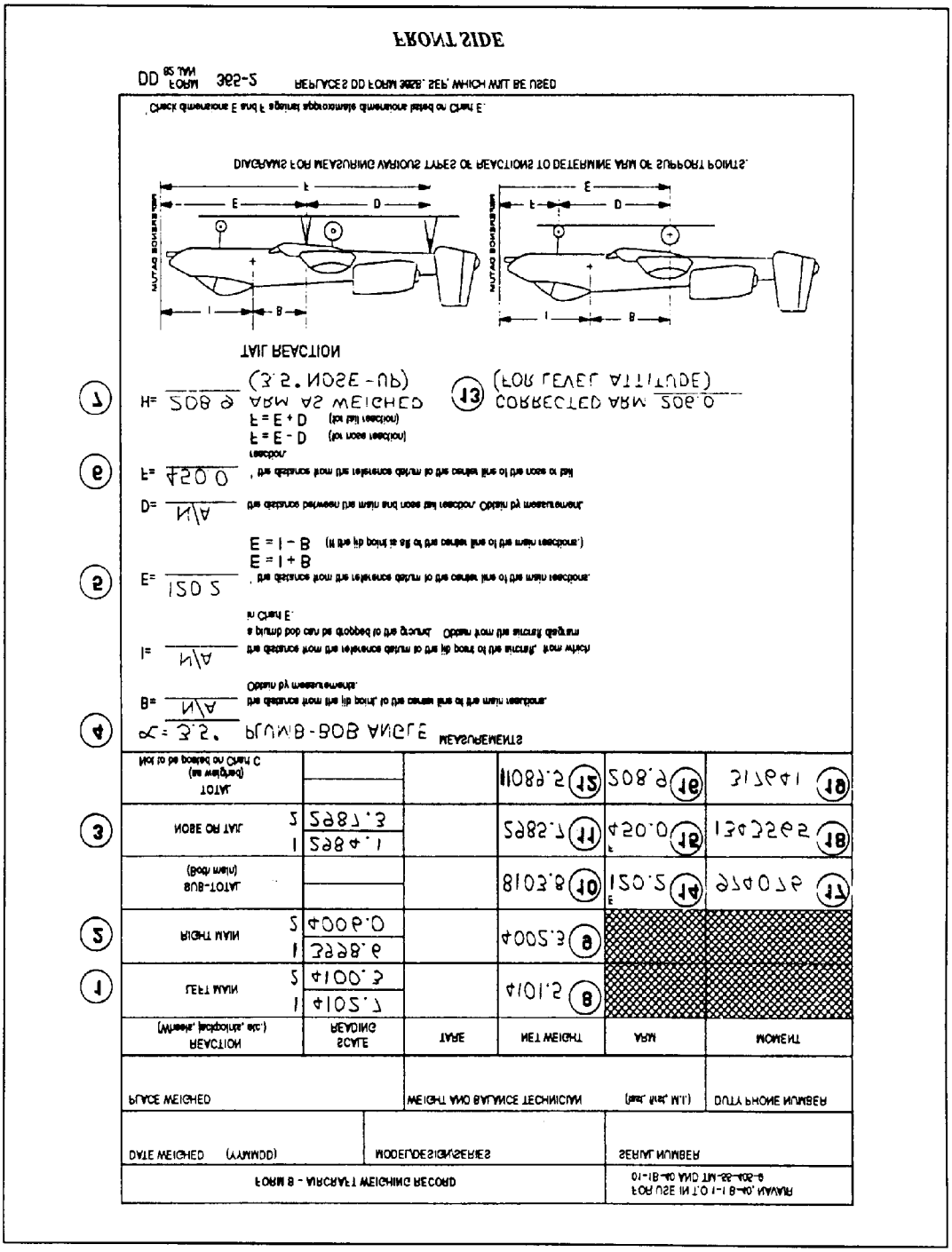
FRONT SIDE
DD FORM 365-2 REPLACES DD FORM 365B, 365, WHICH MUST BE USED
DIAGRAMS FOR MEASURING VARIOUS TYPES OF REACTIONS TO DETERMINE MAN OF SUPPORT POINTS.
TAIL REACTION
FOR USE IN O.T.I.-B-10, MANMA
B-20A-22-MT DMA 01-81-10
FORM - B AIRCRAFT WEIGHING RECORD
DATE WEIGHED (DDMMYY)
MODEL/DESIGN SERIES
SERIAL NUMBER
PLACE WEIGHED
WEIGHT AND BALANCE TECHNICIAN
(Rank, Last, M.I.)
DUTY PHONE NUMBER
REACTION (Wheel, Jackstand, etc.)
SCALE READING
TARE
NET WEIGHT
MAA
MOMENT
LEFT MAIN
RIGHT MAIN
SUB-TOTAL (Body Main)
NOSE RO TAIL
TOTAL (Weight as Not to be based on Chart C in Chart E.
MEASUREMENTS
BUMP-BOB ANGLE
A/N
A/N
A/N

REVERSE SIDE

DD Form 365-5 Reverse, JAN 85 — U.S. Government Printing Office: 1981-181-035/60258

J. Enter continuing need.

REMARKS

(51) HELICOPTER WEIGHED ON JACKS: 3.2° NOSE UP.
BASIC WEIGHT CORRECTED TO 0° (LEVEL ATTITUDE)

REACTIONS USED (58)
E = 1501
E = 4200

CALIBRATED ACCURACY
CALIBRATION DATE (YYMMDD)
SERIAL NUMBER
TYPE SCALE

ITEMS WEIGHED BUT NOT PART OF BASIC WEIGHT	WEIGHT	MRA	MOMENT	BASIC ITEMS NOT IN AIRCRAFT WHEN WEIGHED	WEIGHT	MRA	MOMENT
(50)				(59)			
WEIGHING TOOLS							
STRUT LOCKS	-53.4	155.2	-8287				
JACK ADAPTERS	-1.4	150.5	-181				
MRP CORRECTION			-1490				
TOTAL	-54.8		-4252	TOTAL			

COLUMN I — COLUMN II

DESCRIPTION	NET WEIGHT	MRA	MOMENT	INDEX OR MOM 1/100
TOTAL (As weighed) (From front page)	(55) 2,8011	(56) 50.0	(60) 1,4855	
OIL IN AIRCRAFT	—		—	
TOTAL OF ITEMS WEIGHED BUT NOT PART OF BASIC WEIGHT (From Col I below)	(57) — 54.8		(61) — 4252	
TOTAL OF BASIC ITEMS NOT IN AIRCRAFT WHEN WEIGHED (From Col II below)	(58) +		(62) +	
BASIC AIRCRAFT (From to Chart C)	(63) 7,4011	(64) 50.1	(65) 1,8955	(66) 55.5

AIRCRAFT WEIGHING RECORD

For use in TM 55-450-8

FIGURE 13. Example of an aircraft weighing record DD Form 365-2- Continued.

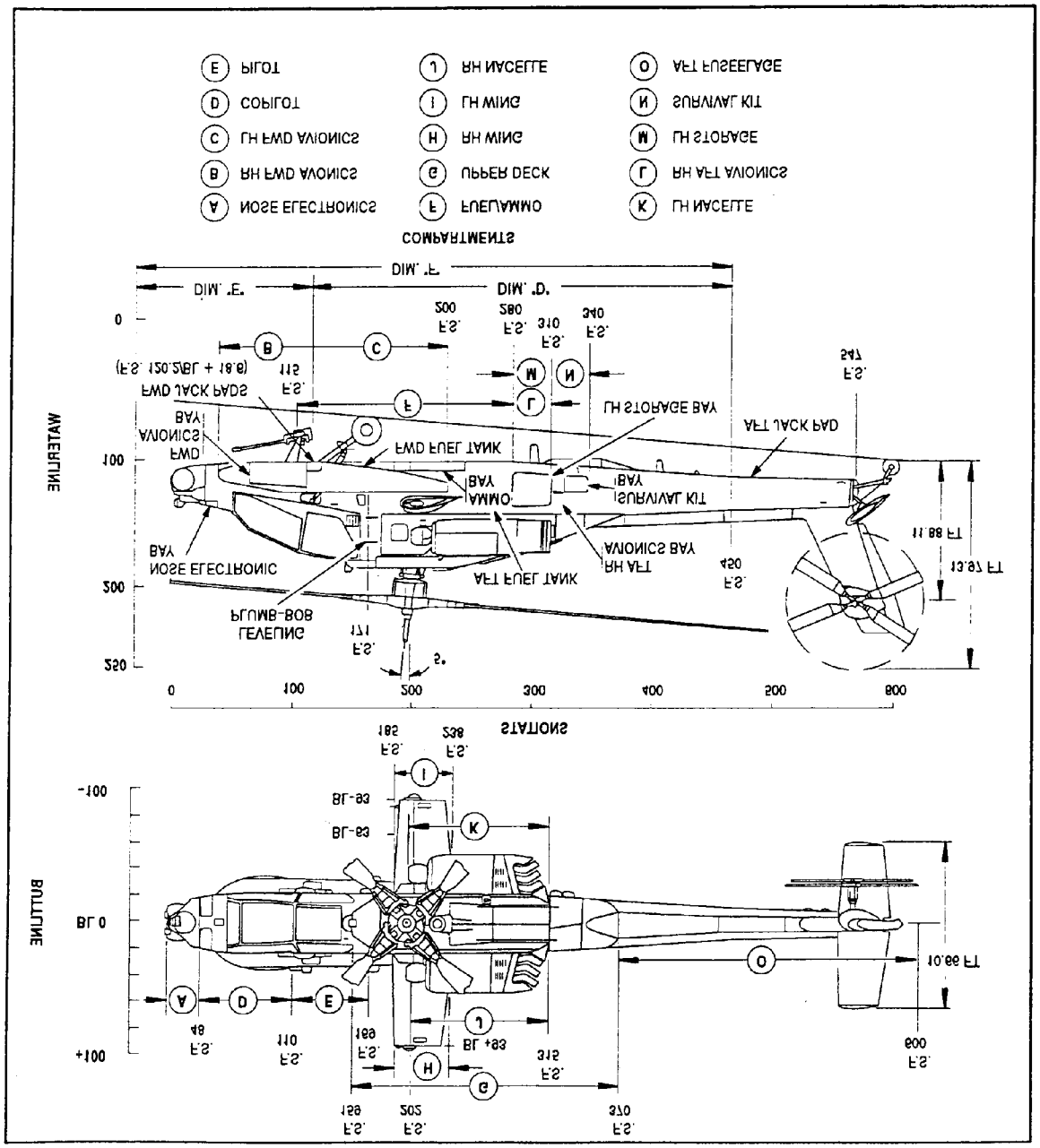

FIGURE 14. Example of two chart diagram.

Table 1. Mobilization Requirements.

WORK PACKAGE	ACTION
0088 00	Materials and Fabrication, step 6
	Add "Depending on the urgency of requirements, availability of materials, and fabrication lead time, provisions of this work package may be relaxed. When that occurs, any practical method may be used to inscribe or attatch the data to the equipment, i.e., decals."
0090 00	Cleaning, step 3
	Add "Clean only to the extent necessary to perform preshop analysis."
0092 00	Cleaning, step 8
	Add "Clean only to the extent necessary to inspect components."
0098 00	Painting, step 3
	Add "Painted surfaces will be treated for corrosion and scratches that expose bare metal. Touch-up painting need not correlate in hue and gloss."
0099 00	Delete.

FIGURE 15. Example of depot mobilization requirements.

NOT MEASUREMENT SENSITIVE

MIL-STD-40051-5A(TM)
2 March 1999

DEPARTMENT OF DEFENSE STANDARD PRACTICE

TECHNICAL MANUALS

PARTS INFORMATION (PI) AND REPAIR PARTS AND SPECIAL TOOLS LIST (RPSTL)

CONTENTS

PARAGRAPH PAGE

1. **SCOPE** 1
1.1 Scope 1

2. **APPLICABLE DOCUMENTS** 1

3. **DEFINITIONS** 1

4. **GENERAL REQUIREMENTS** 1
4.1 General. 1
4.2 Preparation of digital data for electronic delivery 1
4.3 Use of the DTDs / FOSIs 1
4.3.1 Page-based T.S. 1
4.3.2 Frame-based T.S. 2
4.4 Content structure and format 2
4.5 Style and format 2
4.6 Work package development 2
4.7 Selective application and tailoring 2

5. **DETAILED REQUIREMENTS** 2
5.1 General 2
5.2 Parts information development 2
5.2.1 Preparation of PI for frame-based technical manuals 2
5.2.1.1 Parts information (PI) data base 3
5.2.1.2 Inclusion of PI in work packages 4
5.3 Preparation of RPSTLs for page-based technical manuals 4
5.3.1 Separate RPSTL TM 4
5.3.2 RPSTL work packages included in a maintenance TM 4
5.3.3 RPSTL work packages included in a DMWR 4
5.3.3.1 Depot repair parts 5
5.3.4 Parts information chapter 5
5.3.5 Introduction work package 5
5.3.6 Repair parts list work package 12
5.3.6.1 Repair parts for special tool 13
5.3.6.2 Figure titles 13
5.3.6.3 Item number column 13
5.3.6.4 Nonconsecutive item numbers 13
5.3.6.5 SMR code column 13
5.3.6.6 NSN column 13
5.3.6.7 Commercial and Government Entity Code (CAGEC) and part number columns 13
5.3.6.8 Description and UOC column 13
5.3.6.9 Quantity column 15
5.3.6.10 Basic Issue Items (BII) (repair parts)/special tools (repair parts) 15
5.3.6.11 Expendable and durable items 15

CONTENTS

PARAGRAPH PAGE

5.3.7 Special tools list work package 15
5.3.7.1 Functional grouping 15
5.3.7.2 Basis of Issue (BOI) 15
5.3.7.3 Special tool set/kit line entry(ies) 16
5.3.7.4 Components list 16
5.3.7.5 D-coded items 16
5.3.8 Cross-reference index work packages 16
5.3.8.1 NSN index work package 16
5.3.8.2 P/N index work package 16
5.3.8.3 Reference designator index work package 16
5.3.8.4 Bulk figure 16
5.3.8.5 Sets and kits 16
5.3.9 Illustrations 16
5.3.9.1 Arrangement of illustrations 17
5.3.9.2 Use of illustrations 17
5.3.9.3 Identical parts/item numbers 17
5.3.9.4 Identical assemblies 17

6. **NOTES** 17

FIGURE

1. Example of an introduction work package 18
2. Example of a repair parts list illustration 19
3. Example of a repair parts list work package 20
4. Example of indentions (next higher assembly) 21
5. Example of a bulk material list 22
6. Example of kits breakdown option 1 23
7. Example of kits breakdown option 2 24
8. Example of a special tools list work package 25
9. Example of a national stock number index work package 26
10. Example of a part number index work package 27
11. Example of a reference designator index work package 28

1. SCOPE.

1.1 Scope. This standard establishes the technical content requirements for the preparation of Parts Information (PI) or Repair Parts and Special Tools Lists (RPSTLs) for major weapon systems, and their related systems, subsystems, equipment, weapons replacement assemblies (WRAs), and shop replacement assemblies (SRAs). The requirements are applicable for all maintenance levels through overhaul (depot) including Depot Maintenance Work Requirements (DMWRs). Parts Information (PI) requirements are applicable for frame-based technical manuals and Repair Parts and Special Tools Lists (RPSTLs) requirements for paged-based manuals.

2. APPLICABLE DOCUMENTS.

The applicable documents in section 2 of MIL-STD-40051A apply to this Part.

3. DEFINITIONS.

The definitions in section 3 of MIL-STD-40051A apply to this Part.

4. GENERAL REQUIREMENTS.

4.1 General. The PI and RPSTL provides authorized spares and repair parts; special tools; special Test, Measurement, and Diagnostic Equipment (TMDE); and other special support equipment required for performance of all levels of maintenance of the weapon system/equipment, subsystems, assemblies, and components. They authorizes the requisitioning, issue and disposition of spares, repair parts and special tools in accordance with the Source, Maintenance and Recoverability (SMR) codes. When a TM with parts information or a RPSTL with combined levels of maintenance is authorized, the TM/ RPSTL shall contain spares and repair parts data for all levels covered, even though lower levels of maintenance are covered in a separate TM/RPSTL. An explanation of all applicable Department of Army maintenance levels is provided in MIL-STD-40051A, Appendix A.

4.2 Preparation of digital data for electronic delivery. Technical manual data prepared and delivered digitally in accordance with this standard shall be Standard Generalized Markup Language (SGML) tagged using the Document Type Definition (DTD) for Maintenance Instructions and the Formatting Output Specification Instance (FOSI) or style sheets in accordance with MIL-STD-2361. Refer to MIL-STD-40051A (paragraph 4.6) for information on obtaining or accessing this DTD. SGML tags used in the modular DTD are noted throughout the text of this standard in bracketed, bold characters (i.e., <**plwp**>) as a convenience for the TM author and to ensure that the tags are used correctly when developing a document instance.

4.3 Use of the DTDs / FOSIs.

4.3.1 Page-based T.S. The DTDs referenced in this standard interpret the technical content and structure for the functional requirements contained in this standard and are mandatory for use. The FOSIs referenced herein interpret the style and format. As specified by the contracting activity, FOSIs or style sheets may be used to produce final reproducible paper copy for all T.S. prepared in accordance with this standard. For additional information on DTDs and specific FOSIs, refer to MIL-STD-2361.

4.3.2 Frame-based TMs. The DTD referenced in this standard interprets the technical content and structure for the functional requirements contained in this standard and is mandatory for use. Development of frame-based T.S. is accomplished through the use of the DTD combined with the requirements contained in MIL-PRF-87268. The requirements contained in MIL-PRF-87268 apply unless they conflict with the requirements in this standard. The requirements in this standard take precedence over the requirements contained in MIL-PRF-87268. A FOSI or style sheet is used to interpret the style and format for frame-based screen display. For additional information on DTDs and specific FOSIs or style sheets, refer to MIL-STD-2361.

4.4 Content structure and format. The examples provided herein and in MIL-STD-40051A are an accurate representation of the content structure and format requirements contained in this Part and shall be followed to permit the effective use of the DTD for Troubleshooting Procedures.

4.5 Style and format. MIL-STD-40051A provides style and format requirements for the preparation of both page-based and frame-based TMs. These requirements are considered mandatory and are intended for compliance.

4.6 Work package development. Technical manual data developed in accordance with this standard shall be divided into individual, stand alone units of information called work packages. A work package shall consist of descriptive, operational, maintenance, troubleshooting, support, or parts information for the weapon system or equipment.

4.7 Selective application and tailoring. MIL-STD-40051A contains some requirements that may not be applicable to the preparation of all technical manuals. Selective application and tailoring of requirements contained in MIL-STD-40051A are the responsibility of the acquiring activity and shall be accomplished using Appendix A, Technical Manual Content Selection Matrixes, of MIL-STD-40051A. The applicability of some requirements is also designated by one of the following statements: unless specified otherwise by the acquiring activity; as/when specified by the acquiring activity; or when specified by the acquiring activity.

5. DETAILED REQUIREMENTS.

5.1 General. The requirements provided in this Part of the standard are applicable for both page-based and frame-based TMs. Requirements for the preparation of Parts Information (PI) for frame-based TMs are contained in 5.2. Page-based requirements for the preparation of RPSTL data are contained in 5.3.

5.2 Parts information development.

5.2.1 Preparation of PI for frame-based technical manuals. A data base of supporting parts information shall be developed. The parts information data base shall be used to identify all replaceable or repairable parts authorized at the applicable levels of maintenance. The parts information data base shall include parts information data for all authorized spares and repair parts of the system/equipment, special tools, repair kits and kit repair parts, special test, measurement, and diagnostic equipment (TMDE), other support equipment required for performance of maintenance, and Basic Issue Items (BII). The parts information **<pim>** shall be accessible in any work package presentation that a specific part is identified, including but not limited to:

a. Parts cited in any operating or maintenance task.
b. Parts cited in troubleshooting procedures.

c. Parts in supporting locator diagrams.

d. Parts that are shown on any logic flow, circuit, schematic or wiring diagram.

e. Any other frame-based dialog requiring the identification of a specific part.

5.2.1.1 Parts information (PI) data base **<pidb>**. A PI data base shall consist of, as a minimum, the following specific entries for each replaceable and repairable part. This parts data shall be arranged in ascending alphanumeric sequence by part number. If a part is used in more than one system, subsystem, equipment, or assembly, the part number shall be repeated and the applicable next higher assembly part number shall be listed. Part numbers for Government standard parts and attaching parts shall only be listed once and the assignment of a next higher assembly is not required. To facilitate access of parts information, the data base may be separated into specific categories (i.e., system, subsystem, special support equipment, mandatory parts, Basic Issue Items, etc.).

a. Part/Item name <**desc-uoc**>. The item/part name shall be listed. The item/part name shall consist of the federal item name (taken from Federal Supply Cataloging Handbook H6) <**name**> and, if necessary, a minimum description <**desc**>, <**uoc**>, <**boi**> and/or <**usbefserno**> to further identify the item/part.

b. Part Number <**partno**> and Commercial and Government Entity Code (CAGEC) <**cageno**>. The part, model or type number of the item/part shall be listed along with the applicable five-digit CAGEC number, as listed in Catalog Handbook H4/H8.

c. Reference designation, <**refdes**> if applicable. When an item/part is assigned a reference designation it shall be listed.

d. National stock number (NSN) <**nsn**>. The NSN assigned to the applicable item/part shall be listed.

e. Next higher assembly <**parent.partno**>, when applicable. For each item/part listed, the part number of its next higher assembly shall be listed.

f. Source, Maintenance, and Recoverability (SMR) <**smr**> code. The SMR code assigned to the specific item/part shall be listed.

g. Quantity <**qty**>, if required. The total quantity of the item/part needed to complete the maintenance task shall be included.

h. Additional parts information. The following additional parts information shall be included:

(1) Items or parts that are designated as Hardness Critical Items (HCI) shall be identified.
(2) Electrostatic discharge (ESD) sensitive parts shall be identified.
(3) Flight safety critical aircraft parts (FSCAP) shall be identified.
(4) Mandatory replacement parts shall be identified.
(5) Durable and expendable items shall be identified.

(6) Components of end items (COEI) shall be identified.
(7) Special tools and test equipment shall be identified

i. Illustration <**graphic**>. If applicable, when a part/item has an illustration it shall be listed.

5.2.1.2 Inclusion of PI in work packages. Parts information contained in the data base shall be accessible for inclusion and support of the technical information text and supporting graphics contained in all information and task oriented WPs for the following purposes.

a. Parts information essential in the performance and completion of a maintenance or operational task.

b. Parts information required to identify or order a replacement part.

c. Parts information to enhance the descriptive data for better comprehension and general knowledge of a system, equipment, or component.

d. Parts information required to complement training instructions.

5.3 Preparation of RPSTLs for page-based technical manuals. RPSTL requirements include 1) introductory information, 2) tabular listings of all authorized spares and repair parts, special tools, special test, measurement, and diagnostic equipment (TMDE), and other support equipment required for performance of maintenance and 3) illustrations to identify and locate the spare and repair parts. RPSTLs shall be prepared for weapon systems, major components and applicable support and interface equipment. This information shall be contained in one of the following:

a. A separate RPSTL Technical Manual (TM),

b. RPSTL work packages included in a maintenance TM, or

c. RPSTL work packages included in a Depot Maintenance Work Requirement (DMWR).

5.3.1 Separate RPSTL TM. Separate RPSTL T.S. shall consist of front and rear matter and Parts Information Chapters **<pim>** containing the work packages described in 5.3.4.

5.3.2 RPSTL work packages **<rpstlwp>** included in a maintenance TM. When a separate RPSTL is not required or authorized, RPSTL data shall be included as part of a maintenance TM. Introduction, repair parts list, special tools list, and cross reference indexes work packages as described in 5.3.5 through 5.3.8 shall be included, as applicable. RPSTL WPs shall have WP identification information (MIL-STD-40051-1A, 5.1.1). Front and rear matter requirements shall become part of the maintenance TM that includes the RPSTL work packages.

5.3.3 RPSTL work packages **<rpstlwp>** included in a DMWR. If an item of equipment is programmed for depot overhaul and no repair parts (including modules, printed circuits, and components) are authorized for replacement at a level below depot maintenance, authorized repair parts data shall appear in the applicable DMWR. RPSTL WPs shall have WP identification information (MIL-STD-40051-1A, 5.1.1). Introduction, repair parts list, special tools list, and cross reference indexes work packages as described in 5.3.5 through 5.3.8 shall be included, as applicable.

5.3.3.1 Depot repair parts. If a figure(s) contains repair parts for both depot level maintenance and a maintenance level(s) below depot, the depot coded repair parts shall be presented in a DMWR as a RPSTL work package or in the separate RPSTL TM as specified by the acquiring activity. If the RPSTL TM includes depot repair parts, the statement "Including Depot Maintenance Repair Parts" shall be added to the title of the RPSTL TM.

5.3.4 Parts information chapter **<pim>**. Chapters shall consist of the following applicable work packages.

a. Introduction work package **<introwp>**.

b. Repair parts list work package **<plwp>**.

c. Special tools list work package **<stlwp>**.

d. Cross-reference index work packages

(1) National Stock Number (NSN) index work package **<nsnindxwp>**

(2) Part number index work package **<pnindxwp>**

(3) Reference designator index work package **<refdesindxwp>**

5.3.5 Introduction work package **<introwp>**. The introduction work package (text below within the quotation marks) shall be prepared and included verbatim, except for the information indicated by italicized text. Italicized text shall be deleted and, as applicable, replaced with the appropriate information. (Refer to figure 1.)

"INTRODUCTION

SCOPE

This RPSTL lists and authorizes spares and repair parts; special tools; special test, measurement, and diagnostic equipment (TMDE); and other special support equipment required for performance of *(enter maintenance level)* maintenance of the *(enter item name)*. It authorizes the requisitioning, issue, and disposition of spares, repair parts, and special tools as indicated by the source, maintenance, and recoverability (SMR) codes.

GENERAL

In addition to the Introduction work package, this RPSTL is divided into the following work packages.

1. Repair Parts List Work Packages. Work packages containing lists of spares and repair parts authorized by this RPSTL for use in the performance of maintenance. These work packages also include parts which must be removed for replacement of the authorized parts. Parts lists are composed of functional groups in ascending alphanumeric sequence, with the parts in each group listed in ascending figure and item number sequence. Sending units, brackets, filters, and bolts are listed with the component they mount on. Bulk materials are listed by item name in FIG. BULK at the end of the work packages. Repair parts kits are listed separately in their own functional group and work package. Repair parts for reparable special tools are also listed in a separate work package. Items listed are shown on the associated illustrations.

2. Special Tools List Work Packages. Work packages containing lists of special tools, special TMDE, and special support equipment authorized by this RPSTL (as indicated by Basis of Issue (BOI) information in the DESCRIPTION AND USABLE ON CODE (UOC) column). Tools that are components of common tool sets and/or Class VII are not listed.

3. Cross-Reference Indexes Work Packages. There are *(enter applicable number)* cross-reference indexes work packages in this RPSTL: *(enter applicable index titles: the National Stock Number (NSN) Index work package, the Part Number (P/N) Index work package, and the Reference Designator Index work package). (Enter applicable explanations: The National Stock Number Index work package refers you to the figure and item number. The Part Number Index work package refers you to the figure and item number. The Reference Designator Index work package refers you to the figure and item number.)*

EXPLANATION OF COLUMNS IN THE REPAIR PARTS LIST AND SPECIAL TOOLS LIST WORK PACKAGES

ITEM NO. (Column (1)). Indicates the number used to identify items called out in the illustration.

SMR CODE (Column (2)). The SMR code containing supply/requisitioning information, maintenance level authorization criteria, and disposition instruction, as shown in the following breakout:

Source Code	**Maintenance Code**		**Recoverability Code**
xx	xx		x
1st two positions: How to get an item.	3rd position: Who can install, replace, or use the item.	4th position: Who can do complete repair* on the item.	5th position: Who determines disposition action on unserviceable items.

*Complete Repair: Maintenance capacity, capability, and authority to perform all corrective maintenance tasks of the "Repair" function in a use/user environment in order to restore serviceability to a failed item.

Source Code. The source code tells you how you get an item needed for maintenance, repair, or overhaul of an end item/equipment. Explanations of source codes follow:

Source Code	**Application/Explanation**
PA PB PC PD PE PF PG	Stock items; use the applicable NSN to requisition/request items with these source codes. They are authorized to the level indicated by the code entered in the 3rd position of the SMR code. **NOTE** Items coded PC are subject to deterioration.

KD KF KB	Items with these codes are not to be requested/requisitioned individually. They are part of a kit which is authorized to the maintenance level indicated in the 3rd position of the SMR code. The complete kit must be requisitioned and applied.
MO-Made at unit/ AVUM level MF-Made at DS/ AVIM level MH-Made at GS level ML-Made at SRA MD-Made at depot	Items with these codes are not to be requisitioned/requested individually. They must be made from bulk material which is identified by the P/N in the DESCRIPTION AND USABLE ON CODE (UOC) column and listed in the bulk material group work package of the RPSTL. If the item is authorized to you by the 3rd position code of the SMR code, but the source code indicates it is made at higher level, order the item from the higher level of maintenance.
AO-Assembled by unit/AVUM level AF-Assembled by DS/AVIM level AH-Assembled by GS level AL-Assembled by SRA AD-Assembled by depot	Items with these codes are not to be requested/requisitioned individually. The parts that make up the assembled item must be requisitioned or fabricated and assembled at the level of maintenance indicated by the source code. If the 3rd position of the SMR code authorizes you to replace the item, but the source code indicates the item is assembled at a higher level, order the item from the higher level of maintenance.

XADo not requisition an "XA" coded item. Order the next higher assembly. (Refer to NOTE below.)

XB	If an item is not available from salvage, order it using the CAGEC and P/N.
XC	Installation drawings, diagrams, instruction sheets, field service drawings; identified by manufacturer's P/N.
XD	Item is not stocked. Order an XD-coded item through normal supply channels using the CAGEC and P/N given, if no NSN is available.

NOTE

Cannibalization or controlled exchange, when authorized, may be used as a source of supply for items with the above source codes except for those items source coded "XA" or those aircraft support items restricted by requirements of AR 750-1.

Maintenance Code. Maintenance codes tell you the level(s) of maintenance authorized to use and repair support items. The maintenance codes are entered in the third and fourth positions of the SMR code as follows:

Third Position. The maintenance code entered in the third position tells you the lowest maintenance level authorized to remove, replace, and use an item. The maintenance code entered in the third position will indicate authorization to the following levels of maintenance:

Maintenance Code		**Application/Explanation**
C	—	Crew or operator maintenance done within unit/AVUM maintenance.
O	—	Unit level/AVUM maintenance can remove, replace, and use the item.
F	—	Direct support/AVIM maintenance can remove, replace, and use the item.
H	—	General support maintenance can remove, replace, and use the item.
L	—	Specialized repair activity can remove, replace, and use the item.
D	—	Depot can remove, replace, and use the item.

Fourth Position. The maintenance code entered in the fourth position tells you whether or not the item is to be repaired and identifies the lowest maintenance level with the capability to do complete repair (perform all authorized repair functions).

NOTE

Some limited repair may be done on the item at a lower level of maintenance, if authorized by the Maintenance Allocation Chart (MAC) and SMR codes.

Maintenance Code		**Application/Explanation**
O	—	Unit/AVUM is the lowest level that can do complete repair of the item.
F	—	Direct support/AVIM is the lowest level that can do complete repair of the item.
H	—	General support is the lowest level that can do complete repair of the item.
L	—	Specialized repair activity *(enter specialized repair activity designator)* is the lowest level that can do complete repair of the item.
D	—	Depot is the lowest level that can do complete repair of the item.
Z	—	Nonreparable. No repair is authorized.
B	—	No repair is authorized. No parts or special tools are authorized for maintenance of "B" coded item. However, the item may be reconditioned by adjusting, lubricating, etc., at the user level.

Recoverability Code. Recoverability codes are assigned to items to indicate the disposition action on unserviceable items. The recoverability code is shown in the fifth position of the SMR code as follows:

Recoverability Code		**Application/Explanation**
Z	—	Nonreparable item. When unserviceable, condemn and dispose of the item at the level of maintenance shown in the third position of the SMR code.
O	—	Reparable item. When uneconomically reparable, condemn and dispose of the item at the unit level.
F	—	Reparable item. When uneconomically reparable, condemn and dispose of the item at the direct support level.
H	—	Reparable item. When uneconomically reparable, condemn and dispose of the item at the general support level.
D	—	Reparable item. When beyond lower level repair capability, return to depot. Condemnation and disposal of item are not authorized below depot level.
L	—	Reparable item. Condemnation and disposal not authorized below Specialized Repair Activity (SRA).
A	—	Item requires special handling or condemnation procedures because of specific reasons (such as precious metal content, high dollar value, critical material, or hazardous material). Refer to appropriate manuals/directives for specific instructions.

NSN (Column (3)). The NSN for the item is listed in this column.

CAGEC (Column (4)). The Commercial and Government Entity Code (CAGEC) is a five-digit code which is used to identify the manufacturer, distributor, or Government agency/activity that supplies the item.

PART NUMBER (Column (5)). Indicates the primary number used by the manufacturer (individual, company, firm, corporation, or Government activity), which controls the design and characteristics of the item by means of its engineering drawings, specifications, standards, and inspection requirements to identify an item or range of items.

NOTE

When you use an NSN to requisition an item, the item you receive may have a different P/N from the number listed.

DESCRIPTION AND USABLE ON CODE (UOC) (Column (6)). This column includes the following information:

1. The federal item name, and when required, a minimum description to identify the item.

2. P/Ns of bulk materials are referenced in this column in the line entry to be manufactured or fabricated.

3. Hardness Critical Item (HCI). A support item that provides the equipment with special protection from electromagnetic pulse (EMP) damage during a nuclear attack.

4. The statement END OF FIGURE appears just below the last item description in column (6) for a given figure in both the repair parts list and special tools list work packages.

QTY (Column (7)). The QTY (quantity per figure) column indicates the quantity of the item used in the breakout shown on the illustration/figure, which is prepared for a functional group, subfunctional group, or an assembly. A "V" appearing in this column instead of a quantity indicates that the quantity is variable and quantity may change from application to application.

EXPLANATION OF CROSS-REFERENCE INDEXES WORK PACKAGES FORMAT AND COLUMNS

1. National Stock Number (NSN) Index Work Package.

STOCK NUMBER Column. This column lists the NSN in National item identification number (NIIN) sequence. The NIIN consists of the last nine digits of the NSN.

NSN (e.g., 5385-01-574-1476) NIIN	When using this column to locate an item, ignore the first four digits of the NSN. However, the complete NSN should be used when ordering items by stock number.

FIG. Column. This column lists the number of the figure where the item is identified/located. The figures are in numerical order in the repair parts list and special tools list work packages.

ITEM Column. The item number identifies the item associated with the figure listed in the adjacent FIG. column. This item is also identified by the NSN listed on the same line.

2. Part Number (P/N) Index Work Package. P/Ns in this index are listed in ascending alphanumeric sequence (vertical arrangement of letter and number combinations which places the first letter or digit of each group in order A through Z, followed by the numbers 0 through 9 and each following letter or digit in like order).

PART NUMBER Column. Indicates the P/N assigned to the item.

FIG. Column. This column lists the number of the figure where the item is identified/located in the repair parts list and special tools list work packages.

ITEM Column. The item number is the number assigned to the item as it appears in the figure referenced in the adjacent figure number column.”

NOTE: Include 3, as applicable.

“3. Reference Designator Index Work Package. Reference designators in this index are listed in ascending alphanumeric sequence (vertical arrangement of letter and number combination which places the first letter or digit of each group in order "A" through "Z," followed by the numbers "0" through "9" and each following letter or digit in like order).

REFERENCE DESIGNATOR Column. Indicates the reference designator assigned to the item.

FIG. Column. This column lists the number of the figure where the item is identified/located in the repair parts list or special tools list work package.

ITEM Column. The item number is the number assigned to the item as it appears in the figure referenced in the adjacent figure number column.

SPECIAL INFORMATION

UOC. The UOC appears in the lower left corner of the Description Column heading. Usable on codes are shown as "UOC: ..." in the Description Column (justified left) on the first line under the applicable item/nomenclature. Uncoded items are applicable to all models. Identification of the UOCs used in the RPSTL are:

Code	**Used On”**
PAA	*Model M114*
PAB	*Model M114A*
PAC	*Model M114B*

NOTE: Include the above UOC content, as applicable.

“Fabrication Instructions. Bulk materials required to manufacture items are listed in the bulk material functional group of this RPSTL. Part numbers for bulk material are also referenced in the Description Column of the line item entry for the item to be manufactured/fabricated. Detailed fabrication instructions for items source coded to be manufactured or fabricated are found in (*enter applicable TM number*).

Index Numbers. Items which have the word BULK in the figure column will have an index number shown in the item number column. This index number is a cross-reference between the NSN / P/N index work packages and the bulk material list in the repair parts list work package.”

NOTE: For a combined narrative-RPSTL manual associated publications shall not be included.

“Associated Publications. The publication(s) listed below pertains to the (*enter item name*):

Publication	**Short Title**”

NOTE: The following paragraph shall appear only in the unit maintenance RPSTL special instructions.

“Illustrations List. The illustrations in this RPSTL contain unit authorized items. Illustrations published in (*enter applicable TM number for the higher maintenance level RPSTL, e.g., for direct support, general support, etc.)* that contain unit authorized items also appear in this RPSTL. The tabular list in the repair parts list work package contains only those parts coded "O" in the third position of the SMR code, therefore, there may be a break in the item number sequence.”

REPRINTED WITHOUT CHANGE

“**HOW TO LOCATE REPAIR PARTS**

1. When NSNs or P/Ns Are Not Known.

First. Using the table of contents, determine the assembly group to which the item belongs. This is necessary since figures are prepared for assembly groups and subassembly groups, and lists are divided into the same groups.

Second. Find the figure covering the functional group or the subfunctional group to which the item belongs.

Third. Identify the item on the figure and note the number(s).

Fourth. Look in the repair parts list work packages for the figure and item numbers. The NSNs and part numbers are on the same line as the associated item numbers.

2. When NSN Is Known.

First. If you have the NSN, look in the STOCK NUMBER column of the NSN index work package. The NSN is arranged in NIIN sequence. Note the figure and item number next to the NSN.

Second. Turn to the figure and locate the item number. Verify that the item is the one you are looking for.

3. When P/N Is Known.

First. If you have the P/N and not the NSN, look in the PART NUMBER column of the P/N index work package. Identify the figure and item number.

Second. Look up the item on the figure in the applicable repair parts list work package.”

NOTE: Include 4 only if the RPSTL has a reference designator index work package.

“4. When Reference Designator Is Known.

First. If you know the reference designator, look in the REFERENCE DESIGNATOR column of the reference designator index work package. Note the figure and item number.

Second. Turn to the figure and locate the item number. Verify that the item is the one you are looking for.

ABBREVIATIONS

Abbreviation	**Explanation**”

NOTE: Include uncommon abbreviations used in the RPSTL. List/define those not found in ASME Y14.38.

SUPERSEDES PAGE 12 OF MIL-STD-40051-5A

5.3.6 Repair parts list work package **<plwp>**. Each repair parts list work package shall consist of a figure <**figure**> and its associated repair parts lists **<pl>**. (Refer to figures 2 and 3.) Figure 3 is in a **(standard information)** format. For simple equipment, multiple figures and repair parts lists can be included in a single work package.

5.3.6.1 Repair parts for special tools. Repair parts for special tools listed in special tools list work packages shall be illustrated and listed in a separate work package under a functional group titled "Special Tools (Repair Parts)." The "Special Tools (Repair Parts)" group(s) shall follow the figure and list for the last group of the end item(s) listed on the Maintenance Allocation Chart (MAC) and shall precede the figures and lists for kits and bulk items. (Refer to 5.3.6.10.)

5.3.6.2 Figure titles. Figure titles shall be consistent with the titles in the MAC with the nomenclature in right reading order (Refer to figure 2). The figure title may include all the Functional Group Codes (FGCs) illustrated beginning with the highest FGC illustrated. (Refer to figure 2.)

5.3.6.3 Item number column <**callout**>. Items shall be listed on the repair parts list (in the ITEM NO. column) by the same callout number shown on the associated figure. The items shall be listed in ascending alphanumeric sequence.

5.3.6.4 Nonconsecutive item numbers. When illustrations contain item callouts that are for a maintenance level higher than the level of the RPSTL, the items not authorized for maintenance at the RPSTL level shall not be listed in the repair parts list; therefore, items may not be listed consecutively. They shall be listed in ascending alphanumeric sequence.

5.3.6.5 SMR code column <**smr**>. The SMR code column shall include SMR codes assigned to the applicable items.

5.3.6.6 NSN column <**nsn**>. The NSN column shall include the NSN assigned to the applicable item.

5.3.6.7 Commercial and Government Entity Code (CAGEC) <**cageno**> and part number <**partno**> columns. The applicable five-digit CAGEC number, as listed in Catalog Handbook H4/H8, shall appear in the CAGEC column preceding the part number listed in the PART NUMBER column.

5.3.6.8 Description and UOC column <**desc-uoc**>. The DESCRIPTION AND USABLE ON CODE (UOC) column shall include the following information.

a. Header <**fncgrp**>. The header shall consist of the functional group number <**fnccode**> and title <**fnctitle**> appearing on the top line(s). The next line(s) below shall include the figure number and the figure title <**figref**> (may be the same as the functional group title). The headers for lists shall contain the same wording and information as the associated figures.

b. Item name. The item name shall consist of the federal item name <**name**> (taken from Federal Supply Cataloging Handbook H6) and, if necessary, a minimum description <**desc**> to further identify the item. If the item is a Hardness Critical Item, the symbol **HCI** shall precede the item name.

c. Indentions. The item name listed in the DESCRIPTION AND USABLE ON CODE (UOC) column shall be indented to show components of assemblies and next higher assemblies. Indentions shall not exceed five positions. (Refer to figure 4.)

d. UOC <**uoc**>. When an item has multiconfiguration or multimodel use, the three-position alphanumeric UOC representing the applicable configuration in which the item is used shall be placed on the last line under the item description. The letters "UOC:" followed by the applicable UOC shall be indented. When an item is used on all configurations or when only one configuration is covered by the RPSTL, UOCs shall not be shown.

e. Serial number application <**usbefserno**>. When P/Ns of spare/repair items are not the same for all serial numbered equipment of the same model, a statement identifying the Usable Effective (USBL EFF) serial numbers shall be made in the DESCRIPTION AND USABLE ON CODE (UOC) column (e.g., USBL EFF SER NOS 1719-1941). (Refer to figure 3 for other examples.)

f. Assembled items. Spare and repair parts that are part of a nonstocked assembled item (source coded "AO", "AF", "AH", or "AD") shall be assigned item numbers on illustrations and shall be listed in item number sequence on the repair parts list. These items/parts shall be listed immediately below the item to be assembled on the repair parts list. When a particular illustration does not show the parts breakdown of the nonstocked assembly, reference shall be made to the breakdown illustration in the RPSTL. (Refer to figure 3.) Instructions, drawings, charts, and tables showing how to assemble assemblies source coded "A( )" shall not appear in the RPSTL, but shall appear in the narrative maintenance TM.

g. Manufactured items. All items source coded "MO", "MF", "MH", or "MD" shall have the statement in the DESCRIPTION AND USABLE ON CODE (UOC) column as follows: "MAKE FROM (*enter applicable bulk material or other replaceable item name, CAGEC, and P/N*)." Material that is used to make items shall also be shown in a separate functional group called BULK MATERIAL and figure to be titled FIG. BULK. Items in the bulk figure shall be listed alphabetically by item name in the DESCRIPTION AND USABLE ON CODE (UOC) column. (Refer to figure 5.) Numbers in the ITEM column of bulk material list apply to the FIG. BULK only and shall not be associated with item numbers (callouts appearing on the illustrations/figures). Instructions, drawings, charts, and tables required to show how items are made shall not be contained in the RPSTL but shall appear in the narrative maintenance TM.

h. Kits and kit repair parts <**kit**>. Kits and repair parts (source coded "KD", "KF", or "KB") shall conform to the format of either option 1 (Refer to figure 6) or option 2 (refer to figure 7), as specified by the acquiring activity.

(1) Option 1 (kits) <**kit**>. Option 1 kits shall appear at the end of the associated parts list. As specified by the acquiring activity, the ITEM NO. column <**callout**> for kits shall be either left blank or list an alphabetical character(s). The QTY column <**qty**> for kits shall be a V (variable) when the exact quantity may vary. (Refer to figure 6.)

(2) Option 1 (parts) <**kititem**>. Option 1 kit repair parts shall be listed with their applicable figure and appear in item number sequence. The statement "part of Kit P/N (*enter kit P/N*)" shall follow item name <**name**>. Kit repair parts shall also be listed under the kit list at the end of the parts list (Refer to figure 6). Parts of the kit list shall be indented and listed alphabetically by item name or in item number sequence immediately below the kit item name. The quantity <**qty**> (in parentheses), figure, and item number <**figitemno**> shall follow the repair part item name.

(3) Option 2 (kits) <**kit**>. Option 2 kits shall be listed in a separate functional group titled "Repair Kits." This functional group <**fncgroup**> shall be located in a repair parts list work package following the figure and list for the last group of the end item(s) listed on the MAC, including the figure and list for Special Tools (Repair Parts). This kit group shall be located before the bulk material functional group. The kits in this group shall be listed alphanumerically in part number sequence. Parts in the kit group shall be indented two positions and listed alphabetically by item name or in item number sequence under their kit name. (Refer to figure 7.) Item names of the parts shall be followed by the quantity (in parentheses) and the figure and item numbers that appear in the basic parts list. The QTY column <**qty**> for kits shall contain a V (variable) when the exact quantity may vary.

(4) Option 2 (parts) <**kititem**>. Option 2 kit repair parts shall appear in the parts list by item number as shown on the associated figure. They shall be listed in item number sequence. The statement "PART OF KIT P/N (*enter kit part number*)" shall follow the item name.

i. End of figure statement. The statement END OF FIGURE shall appear below the last item described in column 6 for each figure of the tabular lists in the repair parts list and the special tools list work packages.

5.3.6.9 Quantity column <**qty**>. The figure in the QTY column shall represent the number of times the item appears in the illustration/figure with the associated item number. When a definite quantity cannot be determined because the number of uses per equipment or the size/length of an item may vary with each equipment, the letter V shall be placed in the left position of the QTY column.

5.3.6.10 Basic Issue Items (BII) (repair parts)/special tools (repair parts). Repair parts for reparable BII or special tools that do not have separate T.S., but are authorized for the RPSTL, shall be listed in a functional group titled <**fnctitle**> BASIC ISSUE ITEMS (REPAIR PARTS) or SPECIAL TOOLS (REPAIR PARTS), as applicable. Subfunctional groups <**subfncgrp**> shall be assigned, as applicable. (These group(s) precede kits and bulk work packages.) Items listed in functional and subfunctional groups shall be listed and identified with the same basic columnar data required for the end item repair parts. BII and special tools reparable parts shall be supported by illustrations.

5.3.6.11 Expendable and durable items. Expendable and durable items shall not be listed in the RPSTL. (These items shall appear in the applicable narrative TM.)

5.3.7 Special tools list work package **<stlwp>**. A special tools list work package shall consist of a figure (for special tools, special TMDE, and other special support equipment authorized for maintenance of the end item/assembly) and the associated repair parts list **<stl>**. These tools shall be listed in the format shown in figure 8 **(standard information)**.

5.3.7.1 Functional grouping <**fncgrp**>. Items shall be listed under a functional group(s) titled <**fnctitle**> SPECIAL TOOLS. Items within the group shall be listed in ascending figure and item number sequence.

5.3.7.2 Basis of Issue (BOI) <**boi**>. The last line entry(s) in the DESCRIPTION AND USABLE ON CODE (UOC) column <**desc-uoc**> for individual items, sets, or kits shall be the BOI <**boi**>. The BOI shall indicate the quantity of the items, i.e., sets, or kits authorized to support a quantity of end items/assembly(s) or a specific military unit. For example, BOI: 1 auth for 1-12 equip or BOI: 1 per BN HQ when BN has SVC CO. (For other examples of BOI, refer to figure 8.)

5.3.7.3 Special tool set <**stlitem**>/kit line entry(ies) <**kit**>. These line entries shall contain complete information in all columns except ITEM NO. and QTY columns. ITEM NO. and QTY columns shall be left blank.

5.3.7.4 Components list <**stlitem**>. Components of special tool sets and kits shall be listed in figure and item number sequence immediately following the set or kit entry. The line entry for the components shall be indented under the set or kit entry and shall contain complete information in all columns except the QTY column (which shall be left blank). Quantities of components <**qty**> shall be included in a statement in the DESCRIPTION AND USABLE ON CODE (UOC) column <**desc-uoc**> (e.g., qty 1 per set/kit).

5.3.7.5 D-coded items. When a depot level RPSTL does not exist and items are maintained at depot level, they shall be identified with a "D" in the third position of the SMR code in the highest level RPSTL prepared.

5.3.8 Cross-reference index work packages.

5.3.8.1 NSN index work package **<nsnindxwp>**. This index **<nsnindex> (standard information)** shall list the complete NSN for all NSNs assigned to applicable items. However, the line entries shall be arranged in ascending numeric sequence by National Item Identification Number (NIIN) (the last nine digits of the NSN). The NSN <**nsn**> line entry shall identify the first figure ,<**dwgno**>/item number <**callout**> for which the stock number is applicable. (Refer to figure 9.) The NSN shall not be repeated on the same page of the index for each additional figure <**dwgno**>/item number <**callout**> identified by that NSN. When NSN references carry over to another page, the carried over NSN entry shall appear at the top of the list.

5.3.8.2 P/N index work package **<pnindxwp>**. This index **<pnindex> (standard information)** shall be arranged in ascending alphanumeric sequence by P/N. The line entry <**pnindxrow**> for each P/N <**partno**> listed shall identify the applicable figure <**dwgno**> and item number <**callout**>. (Refer to figure 10.) When the P/N appears on more than one figure, the P/N shall not be repeated unless it continues on the next page. If the P/N continues to the next page, it shall be repeated at the top of the page.

5.3.8.3 Reference designator index work package **<refdesindxwp>**. When specified by the acquiring activity, a reference designator index work package shall be included. The index **<refdesindex> (standard information)** shall list the reference designators <**refdes**> in alphanumeric sequence and shall reference the applicable figure <**dwgno**> and item number <**callout**>. (Refer to figure 11.)

5.3.8.4 Bulk figure. When entries in either the NSN or P/N index reference bulk material, the word BULK shall appear in the FIG. column. The numbers in the ITEM No. column shall refer to the item number list in the bulk figure located in the bulk functional group list and shall not refer to item numbers on an illustration.

5.3.8.5 Sets and kits. P/Ns for sets/kits shall be cross-referenced to NSN, figure, and item number for the set/kit. When Option 1 is selected, the ITEM column shall either be left blank or list an alphabetical character (e.g.,"K" for KIT, "S" for SET, etc.). (Refer to 5.3.6.8h.) When Option 2 is selected, the FIG. column shall list the word KITS or SETS, as applicable. (Refer to 5.3.6.8h.)

5.3.9 Illustrations. Illustrations shall be prepared in accordance with MIL-STD-40051A. Additional RPSTL specific illustration requirements are described in paragraphs 5.3.9.1 through 5.3.9.4.

5.3.9.1 Arrangement of illustrations. All illustrations prepared for spares, repair parts, special tools, special TMDE, and other special support equipment shall be arranged in figure number sequence. They shall precede their companion parts list (on the left-hand page preceding the parts list or at the top of the same page of the parts list). Illustrations shall not be duplicated to provide facing page illustrations for the second and subsequent pages of the RPSTL. Illustrations shall not be duplicated to show different models or configurations of an assembly when UOCs can be assigned to indicate differences in configurations.

5.3.9.2 Use of illustrations. Foldout and foldout-foldup illustrations shall not be used in RPSTLs. For clarity, multisheet illustrations may be used. References to illustrations in other T.S. or to illustrations in the narrative portion of a combined maintenance TM with a RPSTL shall not be made. Turn pages shall not be prepared except for RPSTLs supporting nuclear weapons (regulated by the Department of Energy/Defense Nuclear Agency).

5.3.9.3 Identical parts/item numbers. Identical parts (same part number) appearing in a figure (illustration) having only one FGC shall have the same item number. If a figure has two or more FGCs/assemblies, only the identical parts with identical SMR codes within each FGC/assembly shall have the same item number.

5.3.9.4 Identical assemblies. When two or more identical assemblies (same part number) exist in different places, i.e., in the equipment, a breakdown of the parts shall be illustrated only once, i.e., the first time the assembly appears in the RPSTL. For subsequent times that the identical assembly appears, the assembly item name shall appear in the description and UOC column and be followed by the statement SEE FIG...FOR BREAKDOWN. (Refer to figure 3.)

6. NOTES.

The notes in section 6 of MIL-STD-40051A apply to this Part.

TM X-XXX-XXX-XXP **0441 00**

UNIT MAINTENANCE

M198 HOWITZER

INTRODUCTION

SCOPE

This RPSTL lists and authorizes spares and repair parts; special tools; special test, measurement, and diagnostic equipment (TMDE); and other special support equipment required for performance of unit maintenance of the M198 howitzer. It authorizes the requisitioning, issue, and disposition of spares, repair parts, and special tools as indicated by the source, maintenance, and recoverability (SMR) codes.

GENERAL

In addition to the Introduction work package, this RPSTL is divided into the following work packages.

1. Repair Parts List Work Packages. Work packages containing lists of spares and repair parts authorized by this RPSTL for use in the performance of maintenance. These work packages also include parts which must be removed for replacement of the authorized parts. Parts lists are composed of functional groups in ascending alphanumeric sequence, with the parts in each group listed in ascending figure and item number sequence. Sending units, brackets, filters, and bolts shall be listed with the component they mount on. Bulk materials are listed by item name in FIG. BULK at the end of the work packages. Repair parts kits are listed separately in their own functional group and work package. Repair parts for reparable special tools are also listed in a separate work package. Items listed are shown on the associated illustrations.

2. Special Tools List Work Packages. Work packages containing lists of special tools, special TMDE, and special support equipment authorized by this RPSTL (as indicated by Basis of Issue (BOI) information in the DESCRIPTION AND USABLE ON CODE (UOC) column). Tools that are components of common tool sets and/or Class VII shall not be listed.

3. Cross-Reference Indexes Work Packages. There are two cross-reference indexes work packages in this RPSTL: the National Stock Number (NSN) Index work package and the Part Number (P/N) Index work package. The National Stock Number Index work package refers you to the figure and item number. The Part Number Index work package refers you to the figure and item number.

EXPLANATION OF COLUMNS IN THE REPAIR PARTS LIST AND SPECIAL TOOLS LIST WORK PACKAGES

ITEM NO. (Column (1)). Indicates the number used to identify items called out in the illustration.

0441 00-1

FIGURE 1. Example of an introduction work package.

TM 9-1425-473-24P **0896 00**

UNIT MAINTENANCE

ARMAMENT SUBSYSTEM, HELICOPTER
TOW GUIDED MISSILE (M65)

ELECTRICAL EQUIPMENT RACK, FMT
3234023-100

REPAIR PARTS LIST

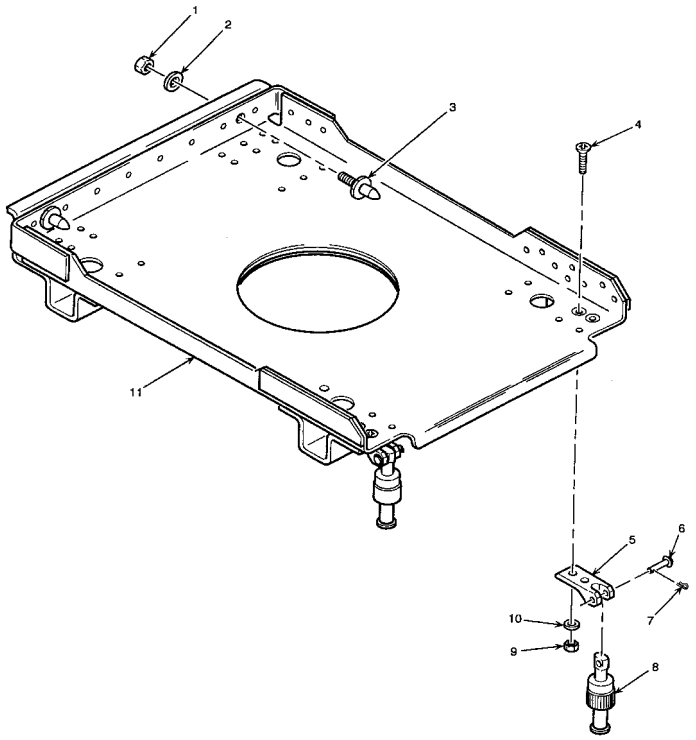

Figure 91. Electrical Equipment Rack, FMT 3234023-100

0896 00-2

FIGURE 2. Example of a repair parts list illustration.

(1) ITEM NO.	(2) SMR CODE	(3) NSN	(4) CAGEC	(5) PART NUMBER	(6) DESCRIPTION AND USABLE ON CODE (UOC)	(7) QTY
					GROUP 6025	
					FIG. 91 RACK, ELECTRICAL EQUIPMENT, FMT 3234023-100	
1	PAOZZ	5310-00-894-3637	80205	NAS1291CAM	NUT, SELF-LOCKING, EX	
					UOC:DCT,DCU.....	2
2	PAOZZ	5310-00-515-7449	88044	AN960C416L	WASHER, FLAT	
					UOC: DCT, DCU.....	2
3	PAOZZ	5315-00-127-8038	82577	3210472	PIN, REAR GUIDE	
					UOC: DCT; DCU.....	2
4	PAOZZ	5305-00-958-3409	96906	MS24694S52	SCREW, MACHINE	
					UOC: DCT; DCU.....	4
5	PAOZZ	5340-01-257-1761	82577	3210471	HINGE, RACK	
					UOC: DCT; DCU.....	2
6	PAOZZ	5315-01-008-7083	82577	3210473	PIN, HINGE	
					UOC: DCT; DCU.....	2
7	PAOZZ	5315-00-288-2478	96906	MS24665-1011	PIN, COTTER	
					UOC: DCT; DCU.....	2
8	PAOZZ	5340-00-132-3718	82577	964037-1C	FASTENER, SELF LOCK	
					UOC: DCT; DCU.....	2
9	PAOZZ	5310-00-844-3302	80205	NAS1291C3	NUT, SELF LOCKING	
					UOC: DCT; DCU.....	4
10	PAOZZ	5310-00-781-9483	80205	NAS620C10L	WASHER, FLAT	
					UOC: DCT; DCU.....	4
11	XAOZZ		82577	6019031	RACK, SUBASSEMBLY	
					UOC: DCT; DCU.....	1
					END OF FIGURE	

FIGURE 3. Example of a repair parts list work package.

(6) DESCRIPTION AND USABLE ON CODE (UOC)	(7) QTY
GROUP 14 ENGINE ASSEMBLY	
FIG.24 OIL PUMP ASSEMBLY	
.BOLT MACHINE	1
.WASHER LOCK	1
.STRAINER, PUMP	1
.PUMP, ROTARY	1
..REGULATOR PRESS	1
..WASHER, KEY	1
..SPACER, RING	5
..GEAR, OIL PUMP	1
..BOLT, MACHINE CAP SCREW 1/4-20X1-3/8 INCH	5
..WASHER, LOCK, 1/4 IN. MEDIUM SAE	1
..LOCKWASHER, STEEL	2
..SCREW, COVER	2
..COVER, PUMP	2
..PUMP, OIL BSC	6
...GEAR, DR SHAFT	1
...BODY ASSY	1
...SHAFT, IDLER	1
....BODY, PUMP	1
END OF FIGURE	

FIGURE 4. Example of indentions (next higher assembly).

(1) ITEM NO.	(2) SMR CODE	(3) NSN	(4) CAGEC	(5) PART NUMBER	(6) DESCRIPTION AND USABLE ON CODE (UOC)	(7) QTY
					GROUP 95 GENERAL USE STANDARDIZED PARTS	
					GROUP 9501 BULK MATERIAL	
					FIG. 15 BULK	
1	PAOZZ	5330-00-982-5130	81349	MILC7637TYP2	ASBESTOS SHEET, WOVE	1
2	XBOZZ		19207	RRC271	CHAIN, WELDLESS	1
3	PAOZZ	5975-00-285-0907	97030	LOOM 3/8 ID	CONDUIT, NONMETALIC	1
4	PAOZZ	9340-00-142-6860	19207	11633348	GLASS, LAMINATED	1
5	PAOZZ	9340-00-285-6775	19200	8635931	GLASS, LAMINATED	1
6	PFOZZ	4720-00-809-2429	30299	FT3548-5	HOSE, AIR DUCT	1
7	PAFZZ	4720-00-001-0093	81349	MIL-H-13531	NOSE ASSEMBLY, NONME	1
8	XBOZZ		85757	3250-0610	HOSE, NONMETALLIC	1
9	PAFZZ	4720-00-999-8994	01276	303-8	HOSE, NONMETALLIC	1
10	PAOZZ	4720-00-951-2433	96909	MS521301A229R	HOSE, NONMETALLIC	1
11	PAOZZ	4720-01-009-9058	85757	3250-1010	HOSE, NONMETALLIC	1
12	PAOZZ	4720-00-683-8830	81349	MIL-H-8788-4	HOSE, NONMETALLIC	1
13	PAOZZ	4720-00-999-4044	11083	3R7752	HOSE, PREFORMED	1
14	XBOZZ		81349	MIL-I-14511	INSULATION BOARD TH	1
15	PAOZZ	9390-00-488-2106	19207	CPR102201	NONMETALLIC SPECIAL	1
16	PAOZZ	5330-00-333-0313	81348	HHP151	RUBBER SHEET SOLID	1
17	XBOZZ		19207	10287823-7	RUBBER STRIP	1
18	PAFZZ	5330-01-040-8923	19207	CPR104394	SEAL, RUBBER CHANNEL	1
19	PAFZZ	5330-01-082-3792	19207	CPR102235	SEAL, RUBBER, SPECIAL	1
20	PAOZZ	5330-01-082-3793	19207	CPR102232	SEAL, RUBBER, SPECIAL	1
21	PAOZZ	5365-00-944-1871	19204	738942	SPACER, SLEEVE	1
22	PAOZZ	4710-00-234-0701	19207	CPR103203-1	TUBE ASSEMBLY, METAL	1
23	PAOZZ	4710-00-277-5524	19207	7036787	TUBE, METALIC	1
24	PAOZZ	4710-00-277-5526	91340	D11076-4A7	TUBE, METALIC	1
25	PAFZZ	4710-00-006-1647	81348	QQ-T-830	TUBE, METALIC	1
26	PAOZZ	4710-00-203-3174	16236	CS4710-0004GB	TUBE, METALIC	1
27	PAOZZ	4710-00-335-2610	81349	M3520-B70E02G	TUBE, METALIC	1
28	PAOZZ	4710-00-277-4515	81346	ASTM B280	TUBE, METALIC	1
29	PAOZZ	4710-00-203-3172	17590	305087-0116	TUBE, METALIC	1
30	XBOZZ		19207	CPR109328-1	TUBING	1
31	PAOZZ	4720-00-462-7494	19200	8589761-22	TUBING, NONMETALLIC	1
32	XBOZZ		19207	CPR109328-2	TUBING, RUBBER	1
33	PAFZZ		19207	CPR102229	WEATHERSTRIP, DOOR	1
34	PAOZZ	6145-00-705-6674	81349	M13486-1-14	WIRE, ELECTRICAL	1
35	PAOZZ	6145-00-254-6117	81349	M13486-1-15	WIRE, ELECTRICAL	1
36	PAOZZ	6145-00-161-1609	81349	M13486-1-3	WIRE, ELECTRICAL	1
37	PAOZZ	9505-00-555-8648	96906	MS20995C47	WIRE, NONELECTRICAL	1

END OF FIGURE

FIGURE 5. Example of a bulk material list.

(1) ITEM NO.	(2) SMR CODE	(3) NSN	(4) CAGEC	(5) PART NUMBER	(6) DESCRIPTION AND USABLE ON CODE (UOC)	(7) QTY
					GROUP 15 AUXILIARY POWER UNIT	
					FIG. 10 T62T-2A, T62T-2A1 GAS TURBINE ENGINE	
1	PAODD	2835-00-906-6766	55820	37688-0	ENGINE, GAS TURBINE T62T-2A UOC:NB4	1
2	PAODD	2835-00-804-8316	55820	37688-1000	ENGINE, GAS TURBINE T62T-2A1 ..... UOC:NB5	1
3	PAOZZ	5310-00-877-5797	96906	MS21044N3	.NUT, SELF-LOCKING UOC:NB4, NB5	2
4	PAOZZ		88044	AN960DD10	.WASHER, FLAT UOC:NB4, NB5, NB6	2
5	KAOZZ	5330-00-263-8030	96906	MS29512-06	.PACKING, PREFORMED PART OF KIT P/N 31766-1	10
6	PAOOO	2910-00-919-2021	58220	28022-4	..NOZZLE ASSEMBLY STATOR UOC:NB4, NB5, NB6	1
7	KDOZZ	5330-00-961-1463	96906	MS35769-5	..GASKET PART OF KIT P/N 31766-1 ..... UOC:NB4, NB5, NB6	1
8	PAOZZ		71895	970HE1UPPH	..NOZZLE, STATOR UOC:NB4, NB5, NB6	1
9	KAOZZ	5330-00-961-1463	55820	26793-1	..GASKET PART OF KIT P/N 31766-1 ..... UOC:NB4, NB5, NB6	1
	PAOZZ		55820	31766-1	SEAL KIT, TURBINE ..... GASKET (1) 10-7 GASKET (1) 10-9 PACKING, PREFORMED (10) 10-5	V
					END OF FIGURE	

FIGURE 6. Example of kits breakdown option 1.

(1) ITEM NO.	(2) SMR CODE	(3) NSN	(4) CAGEC	(5) PART NUMBER	(6) DESCRIPTION AND USABLE ON CODE (UOC)	(7) QTY
					GROUP 94 REPAIR KITS	
					FIG. KITS	
1	PAOZZ	2540-00-255-0775	78385	G704528	PARTS KIT, HEATER, VE PERSONNEL HEATER	1
					BURNER ASSEMBLY (1) 252-6	
					SCREW, MACHINE (1) 252-8	
2	PAOZZ	2540-00-255-0777	78385	G704529	PARTS KIT, HEATER, VE PERSONNEL HEATER	1
					SCREW, MACHINE (1) 252-8	
					VAPORIZER (1) 252-11	
					WASHER, FLAT (1) 252-9	
					WASHER, FIBER (1) 252-10	
					WASHER, FLAT (1) 252-12	
					WICK (1) 252-13	
3	PAFZZ	2990-01-065-7617	19207	12259821	MOUNT, ENGINE TO BE INSTALLED ONLY AS A SET	1
					CAP, ENGINE MOUNT (1) 1-14	
					MOUNT, ENGINE (1) 1-18	
4	PAFZZ	4320-01-133-4069	62983	421242L	PARTS KIT, HYDRAULIC	1
					GASKET (1) 239-5	
					PACKING, PREFORMED (1) 239-4	
					PACKING, PREFORMED (1) 239-6	
					PACKING, SEAL (4) 239-8	
					PARTS KIT, ROTARY PU (2) 239-9	
					PARTS KIT, ROTARY PU (10) 239-10	
					PIN (20) 239-14	
					PLATE, INLET SUPPORT (1) 239-13	
					PLATE, OUTLET SUPPORT (1) 239-7	
					RETAINER, PACKING (1) 239-12	
					RING (1) 239-12	
					ROTOR (1) 239-11	
					SCREW (2) 239-15	
					END OF FIGURE	

FIGURE 7. Example of kits breakdown option 2.

(1) ITEM NO.	(2) SMR CODE	(3) NSN	(4) CAGEC	(5) PART NUMBER	(6) DESCRIPTION AND USABLE ON CODE (UOC)	(7) QTY
					GROUP 30 SPECIAL TOOLS FIG. 254	
1	PEODD	6625-01-169-5333	80058	TS-3920A/ASM	TEST SET, STABILIZATION (BOI: 1 AUTH PER 15 AIRCRAFT)	
1	PEODD	6625-01-266-1636	80058	TS-3920B/ASM	TEST SET, STABILIZATION (BOI: 1 AUTH PER 15 AIRCRAFT)	
2	XBOZZ		80063	A3012556	WEDGE, 30/60/90 DEG. (BOI: 1 AUTH PER TEST SET)	
3	XBOZZ		80063	A3012557	WEDGE, 05/85/90 DEG. (BOI: 1 AUTH PER TEST SET)	
4	XBOZZ		80063	A3012558	PIN, ALIGNMENT (BOI: 1 AUTH PER TEST SET)	
5	XBOZZ		80063	A3012559	FIXTURE, PROTRACTOR (BOI: 1 AUTH PER TEST SET)	
					END OF FIGURE	

FIGURE 8. Example of a special tools list work package.

UNIT MAINTENANCE

NOMENCLATURE OF EQUIPMENT
TYPE, MODEL, PART NUMBER

NATIONAL STOCK NUMBER INDEX

STOCK NUMBER	FIG.	ITEM
5365-00-003-6807	4	4
5935-00-005-2826	3	1
5315-00-012-0123	65	1
5310-00-016-7216	28	12
5340-00-021-3495	77	20
	85	15
5310-00-027-7247	8	2
5310-00-030-0580	51	21
3110-00-034-5257	69	5
	72	5
	75	9
	77	8
	79	5
	81	10
	84	5
	85	3
5305-00-038-9048	45	27
5310-00-045-3296	77	25
	85	20
5310-00-045-4007	2	5
5305-00-052-6456	55	2
5310-00-054-0041	24	3
5305-00-054-5637	6	9
5305-00-054-5638	88	11
5305-00-054-5647	33	15
	51	25
5305-00-054-5648	10	1
	33	7
5305-00-054-5649	2	8
	29	13
	33	3
	51	15
	52	8
	89	3
5305-00-054-5650	51	3
5305-00-054-5651	9	5
	28	5
	90	1
5305-00-054-5652	52	1
5305-00-054-5653	28	6

STOCK NUMBER	FIG.	ITEM
5305-00-054-6653	89	17
5305-00-054-6654	28	23
	29	8
5305-00-054-6655	29	4
	88	21
5305-00-054-6657	29	18
5305-00-054-6666	51	29
5305-00-054-6669	1	10
5305-00-054-9263	60	4
5305-00-056-9961	9	3
	33	16
	88	35
5310-00-057-0573	33	8
	52	2
	90	2
5310-00-058-1823	29	1
	61	4
5315-00-058-6062	45	18
5305-00-059-3657	2	14
5305-00-059-3658	1	3
5305-00-059-3661	51	26
5310-00-061-7326	29	19
5305-00-066-7327	88	37
5305-00-066-7369	34	1
5365-00-067-3836	46	17
5305-00-068-0543	45	9
5365-00-068-8011	70	2
	80	2
5975-00-074-2072	61	12
	88	33
5970-00-074-8780	28	15
5320-00-076-4071	59	19
5360-00-079-1713	11A	2
5305-00-079-5835	51	22
	88	28
5306-00-080-1537	32	28
5305-00-103-2994	45	14
5905-00-104-8368	2	25
5306-00-106-6321	63	5
	77	22

FIGURE 9. Example of a national stock number index work package.

UNIT MAINTENANCE

NOMENCLATURE OF EQUIPMENT
TYPE, MODEL, PART NUMBER

PART NUMBER INDEX

PART NUMBER	FIG.	ITEM
AN960C10L	12	20
AN960C4L	8	11
	9	44
	12	24
	17	28
AN960C416L	8	89
AN960C516L	8	66
AN960C6	8	74
	13	5
AN960C6L	27	6
AN960C616	27	22
AN960C8	8	41
	11	10
AN960C816	17	9
AP373-95	8	84
AP373-96	12	15
B3-14	17	12
CA4342	27	23
CA4440-4	16	54
CD2-Z147-1	16	44
CKR05BX102M	10	7
CMR05F201JPDR	14	16
DB-3	16	65
DBM5W5P	15	17
	31	11
	32	2
DBM5W5S	8	29
	31	3
DBM50906-1	8	28
	15	18
	31	5
	32	4
DDM50PE	10	27
DM53744-21	8	32
DM53744-24	31	2
DM53744-25	31	1
DM53745-25	15	16
	31	10
DM53745-27	15	15
	31	9
DM53745-28	32	1
DSC7900-10-C-6	8	19
EP15160	10	81

PART NUMBER	FIG.	ITEM
I/O-100-00000	21	3
	22	5
	23	3
	24	2
	25	2
	26	2
JANTX1N1206A	12	1
	14	3
JANTX1N4102-1	10	89
JANTX1N4106-1	14	98
JANTX1N4109-1	9	31
JANTX1N4150-1	4	2
	8	77
	9	4
	10	1
	14	2
	28	1
JANTX1N4572A-1	10	86
JANTX1N4626-1	10	90
	28	8
JANTX1N4627	10	85
JANTX1N4627-1	14	99
JANTX1N5419	9	1
	12	2
JANTX1N5420	10	3
	14	4
JANTX1N5645A	9	30
JANTX1N5656A	10	87
JANTX1N5806	10	2
JANTX1N5811	9	3
	14	1
JANTX1N6075	9	2
JANTX1N647-1	4	1
JANTX2N2219A	28	5
JANTX2N2222A	10	29
	14	31
JANTX2N2369A	10	30
JANTX2N2907A	10	28
	14	34
JANTX2N3421	10	31
JANTX2N3507	9	11
JANTX2N3737	9	12
JANTX2N3868	9	13

FIGURE 10. Example of a part number index work package.

TM 9-XXXX-XXX-34P **0032 00**

DIRECT SUPPORT

NOMENCLATURE OF EQUIPMENT
TYPE, MODEL, PART NUMBER

REFERENCE DESIGNATOR INDEX

REFERENCE DESIGNATOR	FIG.	ITEM
S1	1	15
W2	1	3
2AT1	2	309
2AT10	2	552
2AT11	2	699
2AT12	2	699
2AT13	2	479
2AT14	2	479
2AT2	2	309
2AT3	2	558
2AT4	2	564
2AT5	2	705
2AT5	2	479
2AT6	2	494
2AT7	2	675
2AT8	2	624
2AT9	2	552
2A1	2	489
2A1AT2	71	30
2A1AT3	71	33
2A1A1	70	6
2A1A10	70	6
2A1A11	70	12
2A1A13	70	13
2A1A14	70	14
2A1A15	70	14
2A1A16	70	15
2A1A17	70	16
2A1A18	70	13
2A1A19	70	14
2A1A20	70	14
2A1A21	70	15
2A1A22	70	16
2A1A23	70	17
2A1A24	70	13
2A1A25	70	14
2A1A26	70	14
2A1A27	70	15
2A1A28	70	16
2A1A29	70	18

REFERENCE DESIGNATOR	FIG.	ITEM
2A1A4	70	8
2A1A6	70	9
2A1A7	70	9
2A1A8	70	10
2A1A9	70	11
2A1DL1	70	25
2A1DL2	70	25
2A1DL3	70	25
2A1DL4	70	25
2A1DL5	70	25
2A1DL6	70	25
2A1J20	71	27
2A1J25	71	36
2A1J29	71	34
2A1W10	71	46
2A1W12	71	44
2A1W14	71	45
2A1W30	70	31
2A1W31	70	29
2A1W32	70	30
2A1W33	70	28
2A1W34	70	26
2A1W35	70	27
2A1W36	70	35
2A10	2	590
2A10A1	80	2
2A10A10	80	2
2A10A11	80	3
2A10A13	80	4
2A10A14	80	2
2A10A15	80	5
2A10A3	80	2
2A10A5	80	2
2A10A7	80	2
2A10A9	80	2
2A100	3	186
2A100CB1	18	15
2A100CB2	18	37
2A100CB3	18	37
2A100CB4	18	37

0032 00-1

FIGURE 11. Example of a reference designator index work package.

NOT MEASUREMENT SENSITIVE

MIL-STD-40051-6A(TM)
2 March 1999

DEPARTMENT OF DEFENSE STANDARD PRACTICE

TECHNICAL MANUALS

SUPPORTING INFORMATION

CONTENTS

PARAGRAPH PAGE

1. **SCOPE** 1
1.1 Scope 1

2. **APPLICABLE DOCUMENTS** 1

3. **DEFINITIONS** 1

4. **GENERAL REQUIREMENTS** 1
4.1 General 1
4.2 Maintenance level applicability 1
4.3 Preparation of digital data for electronic delivery 1
4.4 Use of the DTDs / FOSIs 1
4.4.1 Page-based TMs 1
4.4.2 Frame-based TMs 2
4.5 Content structure and format 2
4.6 Style and format 2
4.7 Work package development 2
4.8 Selective application and tailoring 2

5. **DETAILED REQUIREMENTS** 2
5.1 Preparation of supporting information 2
5.2 References work package 2
5.2.1 Scope 2
5.2.2 Publication list 2
5.3 Maintenance allocation chart (MAC) **(Unit level only)** 3
5.3.1 Introduction for standard format MAC work package 3
5.3.2 Introduction for three-level Army aviation MAC work package 6
5.3.3 MAC work package 12
5.3.3.1 MAC entries 12
5.3.3.2 MAC format 13
5.3.3.3 Tools and test equipment requirements 13
5.3.3.4 Remarks 13
5.4 RPSTL work package **(-20/AVUM level or above only)** 13
5.5 Components of end item (COEI) and basic issue items (BII) lists work package **(operator only)** 13
5.5.1 Introduction for COEI and BII lists work package **(operator only)** 14
5.5.2 COEI list 15
5.5.2.1 List 15
5.5.3 BII list 15
5.6 AAL work package **(operator only)** 15
5.6.1 Introduction 15
5.6.2 AAL list 16
5.7 Expendable and durable items list work package 16
5.7.1 Introduction for expendable and durable items list work package 16

CONTENTS

PARAGRAPH PAGE

5.7.2 Expendable and durable items list 17
5.8 Tool identification list work package **(-20/AVUM level or above only)** 17
5.8.1 Introduction for tool identification list work package **(-20/AVUM level or above only)** 17
5.8.2 Tool identification list 18
5.9 Mandatory replacement parts work package **(-20/AVUM level or above only)** 18
5.10 Critical safety items (CSI) and flight safety critical aircraft parts (FSCAP) work package 18
5.10.1 Critical safety items (CSI) 18
5.10.2 Flight safety critical aircraft parts (FSCAP) 1
5.11 Support items work package 19
5.12 Additional work packages 19

6. **NOTES** 19

FIGURE
1. Example of references 20
2. Example of a standard MAC introduction 21
3. Example of an aviation MAC introduction 22
4. Example of a standard MAC 23
5 Example of an aviation MAC 24
6. Example of standard MAC tools and test equipment and remarks tables 25
7. Example of aviation MAC tools and test equipment and remarks tables 26
8. Example of a components of end item and basic issue items lists 27
9. Example of an additional authorization list 30
10. Example of an expendable and durable items list 31
11. Example of a tool identification list 32
12. Example of a mandatory replacement parts list 33
13. Example of a flight safety critical aircraft parts table. 34

1. SCOPE.

1.1 Scope. This standard establishes the technical content requirements for the preparation of supporting information (previously known as appendixes) for major weapon systems, and their related systems, subsystems, equipment, weapons replacement assemblies (WRAs), and shop replacement assemblies (SRAs). The requirements are applicable for all maintenance levels through overhaul (depot) including Depot Maintenance Work Requirements (DMWRs) . The requirements can be used to develop TMs in a variety of output forms including interactive screen presentations (frame-based manuals) and paper paged-based manuals.

2. APPLICABLE DOCUMENTS.

The applicable documents in section 2 of MIL-STD-40051A apply to this Part.

3. DEFINITIONS.

The definitions in section 3 of MIL-STD-40051A apply to this Part.

4. GENERAL REQUIREMENTS.

4.1 General. Supporting information shall be prepared for weapon systems, major equipment, components and applicable support and interface equipment. Supporting information requirements are included for the preparation of technical data that supplements the specific operation and maintenance information contained in the TM. This supplemental information includes reference data, general maintenance and parts information and associated illustrations.

4.2 Maintenance level applicability. Requirements contained in this standard are applicable to all maintenance levels unless specifically noted in bold and in parentheses (i.e., **Direct Support**). The labeled requirements shall be applicable to all TMs containing that maintenance level. An explanation of all applicable Department of Army maintenance levels is provided in MIL-STD-40051A, Appendix C.

4.3 Preparation of digital data for electronic delivery. Technical manual data prepared and delivered digitally in accordance with this standard shall be Standard Generalized Markup Language (SGML) tagged using the Document Type Definition (DTD) for Maintenance Instructions and the Formatting Output Specification Instance (FOSI) or style sheets in accordance with MIL-STD-2361. Refer to MIL-STD-40051A (paragraph 4.6) for information on obtaining or accessing this DTD. SGML tags used in the modular DTD are noted throughout the text of this standard in bracketed, bold characters (i.e., <**macwp**>) as a convenience for the TM author and to ensure that the tags are used correctly when developing a document instance.

4.4 Use of the DTDs / FOSIs.

4.4.1 Page-based TMs. The DTDs referenced in this standard interpret the technical content and structure for the functional requirements contained in this standard and are mandatory for use. The FOSIs referenced herein interpret the style and format. As specified by the contracting activity, FOSIs or style sheets may be used to produce final reproducible paper copy for all TMs prepared in accordance with this standard. For additional information on DTDs and specific FOSIs, refer to MIL-STD-2361.

4.4.2 Frame-based TMs. The DTD referenced in this standard interprets the technical content and structure for the functional requirements contained in this standard and is mandatory for use. Development of frame-based TMs is accomplished through the use of the DTD combined with the requirements contained in MIL-PRF-87268. The requirements contained in MIL-PRF-87268 apply unless they conflict with the requirements in this standard. The requirements in this standard take precedence over the requirements contained in MIL-PRF-87268. A FOSI or style sheet is used to interpret the style and format for frame-based screen display. For additional information on DTDs and specific FOSIs or style sheets, refer to MIL-STD-2361.

4.5 Content structure and format. The examples provided herein and in MIL-STD-40051A are an accurate representation of the content structure and format requirements contained in this Part and shall be followed to permit the effective use of the DTD for Supporting Information.

4.6 Style and format. MIL-STD-40051A provides style and format requirements for the preparation of both page-based and frame-based TMs. These requirements are considered mandatory and are intended for compliance.

4.7 Work package development. Technical manual data developed in accordance with this standard shall be divided into individual, stand alone units of information called work packages. A work package shall consist of descriptive, operational, maintenance, troubleshooting, support, or parts information for the weapon system or equipment.

4.8 Selective application and tailoring. MIL-STD-40051A contains some requirements that may not be applicable to the preparation of all technical manuals. Selective application and tailoring of requirements contained in MIL-STD-40051A are the responsibility of the acquiring activity and shall be accomplished using Appendix A, Technical Manual Content Selection Matrixes, of MIL-STD-40051A. The applicability of some requirements is also designated by one of the following statements: unless specified otherwise by the acquiring activity; as/when specified by the acquiring activity; or when specified by the acquiring activity.

5. DETAILED REQUIREMENTS.

5.1 Preparation of supporting information. Supporting information shall be developed as work packages. Supporting information work packages are described in 5.2 through 5.12. WPs shall include WP identification information (MIL-STD-40051-1A, 5.1.1). For **page-based TMs**, these work packages shall be placed in the TM in the order in which they are presented herein, as applicable.

5.2 References work package **<refwp>**. This work package shall list all publications referenced in the TM and required by the user to operate and/or maintain the equipment. It shall consist of a scope **<scope>** and publication list **<publist>**.

5.2.1 Scope **<scope>**. Information concerning the use and content of the references work package shall be prepared. (Refer to figure 1.)

5.2.2 Publication list **<publist>**. Individual paragraphs shall be prepared for each publication type. All related/referenced publications, with the exception of those publications that are currently unpublished, shall be listed. This list shall identify the publications by number **<pubident>** and title **<name>**. If the publication is nongovernment, the source shall be given. Titles shall be listed alphabetically under each publication type. (Refer to figure 1.) If a List of Applicable Publications (LOAP) exists, it may be referenced.

SUPERSEDES PAGE 2 OF MIL-STD-40051-6A

5.3 Maintenance allocation chart (MAC) work package **(Unit level only)**. The MAC shall include an introduction work package and MAC work package.

5.3.1 Introduction for standard format MAC work package **<macintrowp>**. The following text shall be prepared and included verbatim. (Refer to figure 2 .)

"MAINTENANCE ALLOCATION CHART (MAC)

INTRODUCTION

The Army Maintenance System MAC

This introduction provides a general explanation of all maintenance and repair functions authorized at various maintenance levels under the standard Army Maintenance System concept.

The MAC (immediately following the introduction) designates overall authority and responsibility for the performance of maintenance functions on the identified end item or component. The application of the maintenance functions to the end item or component shall be consistent with the capacities and capabilities of the designated maintenance levels, which are shown on the MAC in column (4) as:

Unit — includes two subcolumns, C (operator/crew) and O (unit) maintenance.
Direct Support — includes an F subcolumn.
General Support — includes an H subcolumn.
Depot — includes a D subcolumn.

The tools and test equipment requirements (immediately following the MAC) list the tools and test equipment (both special tools and common tool sets) required for each maintenance function as referenced from the MAC.

The remarks (immediately following the tools and test equipment requirements) contain supplemental instructions and explanatory notes for a particular maintenance function.

Maintenance Functions

Maintenance functions are limited to and defined as follows:

1. Inspect. To determine the serviceability of an item by comparing its physical, mechanical, and/or electrical characteristics with established standards through examination (e.g., by sight, sound, or feel). This includes scheduled inspection and gagings and evaluation of cannon tubes.

2. Test. To verify serviceability by measuring the mechanical, pneumatic, hydraulic, or electrical characteristics of an item and comparing those characteristics with prescribed standards on a scheduled basis, i.e., load testing of lift devices and hydrostatic testing of pressure hoses.

3. Service. Operations required periodically to keep an item in proper operating condition; e.g., to clean (includes decontaminate, when required), to preserve, to drain, to paint, or to replenish fuel, lubricants, chemical fluids, or gases. This includes scheduled exercising and purging of recoil mechanisms.

4. Adjust. To maintain or regulate, within prescribed limits, by bringing into proper position, or by setting the operating characteristics to specified parameters.

5. Align. To adjust specified variable elements of an item to bring about optimum or desired performance.

6. Calibrate. To determine and cause corrections to be made or to be adjusted on instruments of test, measuring, and diagnostic equipment used in precision measurement. Consists of comparisons of two instruments, one of which is a certified standard of known accuracy, to detect and adjust any discrepancy in the accuracy of the instrument being compared.

7. Remove/Install. To remove and install the same item when required to perform service or other maintenance functions. Install may be the act of emplacing, seating, or fixing into position a spare, repair part, or module (component or assembly) in a manner to allow the proper functioning of an equipment or system.

8. Replace. To remove an unserviceable item and install a serviceable counterpart in its place. "Replace" is authorized by the MAC and assigned maintenance level is shown as the third position code of the Source, Maintenance and Recoverability (SMR) code.

9. Repair. The application of maintenance services, including fault location/troubleshooting, removal/installation, disassembly/assembly procedures, and maintenance actions to identify troubles and restore serviceability to an item by correcting specific damage, fault, malfunction, or failure in a part, subassembly, module (component or assembly), end item, or system.

NOTE

The following definitions are applicable to the "repair" maintenance function:

Services — Inspect, test, service, adjust, align, calibrate, and/or replace.

Fault location/troubleshooting — The process of investigating and detecting the cause of equipment malfunctioning; the act of isolating a fault within a system or Unit Under Test (UUT).

Disassembly/assembly — The step-by-step breakdown (taking apart) of a spare/functional group coded item to the level of its least component, that is assigned an SMR code for the level of maintenance under consideration (i.e., identified as maintenance significant).

Actions — Welding, grinding, riveting, straightening, facing, machining, and/or resurfacing.

10. Overhaul. That maintenance effort (service/action) prescribed to restore an item to a completely serviceable/operational condition as required by maintenance standards in appropriate technical publications. Overhaul is normally the highest degree of maintenance performed by the Army. Overhaul does not normally return an item to like new condition.

11. Rebuild. Consists of those services/actions necessary for the restoration of unserviceable equipment to a like new condition in accordance with original manufacturing standards. Rebuild is the highest degree of materiel maintenance applied to Army equipment. The rebuild operation includes the act of returning to zero those age measurements (e.g., hours/miles) considered in classifying Army equipment/components.

Explanation of Columns in the MAC

Column (1) — Group Number. Column (1) lists FGC numbers, the purpose of which is to identify maintenance significant components, assemblies, subassemblies, and modules with the Next Higher Assembly (NHA).

Column (2) — Component/Assembly. Column (2) contains the item names of components, assemblies, subassemblies, and modules for which maintenance is authorized.

Column (3) — Maintenance Function. Column (3) lists the functions to be performed on the item listed in column (2). (For a detailed explanation of these functions refer to "Maintenance Functions" outlined above.)

Column (4) — Maintenance Level. Column (4) specifies each level of maintenance authorized to perform each function listed in column (3), by indicating work time required (expressed as manhours in whole hours or decimals) in the appropriate subcolumn. This work time figure represents the active time required to perform that maintenance function at the indicated level of maintenance. If the number or complexity of the tasks within the listed maintenance function varies at different maintenance levels, appropriate work time figures are to be shown for each level. The work time figure represents the average time required to restore an item (assembly, subassembly, component, module, end item, or system) to a serviceable condition under typical field operating conditions. This time includes preparation time (including any necessary disassembly/assembly time), troubleshooting/fault location time, and quality assurance time in addition to the time required to perform the specific tasks identified for the maintenance functions authorized in the MAC. The symbol designations for the various maintenance levels are as follows:

C — Operator or crew maintenance
O — Unit maintenance
F — Direct support maintenance
L — Specialized repair activity (SRA)
H — General support maintenance
D — Depot maintenance

NOTE

The "L" maintenance level is not included in column (4) of the MAC. Functions to this level of maintenance are identified by a work time figure in the "H" column of column (4), and an associated reference code is used in the REMARKS column (6). This code is keyed to the remarks and the SRA complete repair application is explained there.

Column (5) — Tools and Equipment Reference Code. Column (5) specifies, by code, those common tool sets (not individual tools), common Test, Measurement and Diagnostic Equipment (TMDE), and special tools, special TMDE and special support equipment required to perform the designated function. Codes are keyed to the entries in the tools and test equipment table.

Column (6) — Remarks Code. When applicable, this column contains a letter code, in alphabetical order, which is keyed to the remarks table entries.

Explanation of Columns in the Tools and Test Equipment Requirements

Column (1) — Tool or Test Equipment Reference Code. The tool or test equipment reference code correlates with a code used in column (5) of the MAC.

Column (2) — Maintenance Level. The lowest level of maintenance authorized to use the tool or test equipment.

Column (3) — Nomenclature. Name or identification of the tool or test equipment.

Column (4) — National Stock Number (NSN). The NSN of the tool or test equipment.

Column (5) — Tool Number. The manufacturer's part number, model number, or type number.

Explanation of Columns in the Remarks

Column (1) — Remarks Code. The code recorded in column (6) of the MAC.

Column (2) — Remarks. This column lists information pertinent to the maintenance function being performed as indicated in the MAC."

5.3.2 Introduction for three-level Army aviation MAC work package **<macintrowp>**. The following text shall be prepared and included verbatim. (Refer to figure 3 .)

"**MAINTENANCE ALLOCATION CHART (MAC)**

INTRODUCTION

Aviation Maintenance Allocation Chart

This MAC assigns maintenance functions in accordance with the Aviation Maintenance concept for Army aviation. These maintenance levels — Aviation Unit Maintenance (AVUM), Aviation Intermediate Maintenance (AVIM), and depot maintenance — are depicted in the MAC as:

AVUM — corresponds to an "O" code in the Repair Parts and Special Tools List (RPSTL).
AVIM — corresponds to an "F" code in the RPSTL.
DEPOT — corresponds to a "D" code in the RPSTL.

The maintenance to be performed below depot and in the field is described as follows:

Aviation Unit Maintenance (AVUM). AVUM activities will be staffed and equipped to perform high frequency "On-Aircraft" maintenance tasks required to retain or return aircraft systems to a serviceable condition. The maintenance capability of the AVUM will be governed by the Maintenance Allocation Chart (MAC) and limited by the amount and complexity of Ground Support Equipment (GSE), facilities required, authorized manning strength, and critical skills available. The range and quantity of authorized spare modules/components will be consistent with the mobility requirements dictated by the air mobility concept. (Assignments of maintenance tasks to divisional company size aviation units will consider the overall maintenance capability of the division, the requirement to conserve personnel and equipment resources, and air mobility requirements.)

1. Company Size Aviation Units. Perform those tasks which consist primarily of preventive maintenance and maintenance repair and replacement functions associated with sustaining a high level of aircraft operational readiness. Perform maintenance inspections and servicing to include preflight, daily, intermediate, periodic (or phased), and special inspections, as authorized by the MAC or higher headquarters. Identify the cause of equipment/system malfunctions using applicable technical manual troubleshooting instructions, Built-In Test Equipment (BITE), installed aircraft instruments, or Test, Measurement, and Diagnostic Equipment (TMDE). Replace worn or damaged modules/components that do not require complex adjustments or system alignment and which can be removed/installed with available skills, tools, and ground support equipment. Perform operational and continuity checks and make minor repairs to the electrical system. Inspect, service, and make operational, capacity, and pressure checks to hydraulic systems. Perform servicing, functional adjustments, and minor repair/replacement to the flight control, propulsion, power train, and fuel systems. Accomplish airframe repair that does not require extensive disassembly, jigging, or alignment. The manufacture of airframe parts will be limited to those items which can be fabricated with tools and equipment found in current air mobile tool and shop sets. Evacuate unserviceable modules/components and end items beyond the repair capability of AVUM to the support AVIM.

2. Less than Company Size Aviation Units. Aviation elements organic to brigade, group, battalion headquarters, and detachment size units are normally small and have less than 10 aircraft assigned. Maintenance tasks performed by these units will be those which can be accomplished by the aircraft crew chief or assigned aircraft repairman and will normally be limited to preventive maintenance, inspections, servicing, spot painting, module/component fault diagnosis, and replacement of selected modules/components. Repair functions will normally be accomplished by the support AVIM unit.

Aviation Intermediate Maintenance (AVIM).

1. Provides mobile, responsive "one-stop" maintenance support. (Maintenance functions which are not conducive to sustaining air mobility will be assigned to depot maintenance.)

2. May perform all maintenance functions authorized to be done at AVUM. Repair of equipment for return to user will emphasize support of operational readiness requirements. Authorized maintenance includes replacement and repair of modules/components and end items which can be accomplished efficiently with available skills, tools, and equipment.

3. Establishes the Direct Exchange (DX) program for AVUM units by repairing selected items for return to stock when such repairs cannot be accomplished at the AVUM level.

4. Inspects, troubleshoots, performs diagnostic tests, repairs, adjusts, calibrates, and aligns aircraft system modules/components. AVIM units will have capability to determine the serviceability of specified modules/components removed prior to the expiration of the Time Between Overhaul (TBO) or finite life. Module/component disassembly and repair will support the DX program and will normally be limited to tasks requiring cleaning and the replacement of seals, fittings, and items of common hardware. Airframe repair and fabrication of parts will be limited to those maintenance tasks which can be performed with available tools and test equipment. Unserviceable reparable modules/components and end items which are beyond the capability of AVIM to repair will be evacuated to depot maintenance.

5. Performs aircraft weight and balance inspections and other special inspections which exceed AVUM capability.

6. Provides quick response maintenance support, including aircraft recovery and air evacuation, on-the-job training, and technical assistance through the use of mobile maintenance contact teams.

7. Maintains authorized operational readiness float aircraft.

8. Provides collection and classification services for serviceable/unserviceable materiel.

9. Operates a cannibalization activity in accordance with AR 710-2 (Supply Policy Below the Wholesale Level) and DA PAM 710-2-2 (Supply Support Activity System Manual Procedures). (The aircraft maintenance company within the maintenance battalion of a division will perform AVIM functions consistent with air mobility requirements and conservation of personnel and equipment resources. Additional intermediate maintenance support will be provided by the supporting nondivisional AVIM unit.)

Use of the MAC

NOTE

Approved item names are used throughout this MAC. Generic terms/nomenclature (if any) are expressed in parentheses and are not to be considered as official terminology.

This MAC assigns maintenance functions to the lowest level of maintenance, based on past experience and the following considerations:

Skills available.

Work time required.

Tools and test equipment required and/or available.

Only the lowest level of maintenance authorized to perform a maintenance function is indicated. If the lowest maintenance level cannot perform all tasks of any single maintenance function (e.g., test, repair), then the higher maintenance level(s) that can accomplish additional tasks will also be indicated.

A maintenance function assigned to a maintenance level will automatically be authorized to be performed at any higher maintenance level.

A maintenance function that cannot be performed at the assigned level of maintenance for any reason may be evacuated to the next higher maintenance level. Higher maintenance levels will perform the maintenance functions of lower maintenance levels when required by the commander who has the authority to direct such tasking.

The assignment of a maintenance function will not be construed as authorization to carry the related repair parts or spares in stock. Information to requisition or otherwise secure the necessary repair parts will be as specified in the associated RPSTL.

Normally there will be no deviation from the assigned level of maintenance. In cases of operational necessity, at the request of a lower maintenance level and on a one-time basis, transfer of maintenance functions to the lower level may be accomplished by specific authorization of the maintenance officer of the higher level of maintenance to which the function is assigned. The special tools, equipment, etc., required by the lower level of maintenance to perform this function will be furnished by the maintenance level to which the function is assigned. This transfer of a maintenance function to a lower maintenance level does not relieve the higher maintenance level of the responsibility for the function. The higher level of maintenance will provide technical supervision and inspection of the function being performed at the lower level.

Maintenance Functions

Maintenance functions will be limited to and defined as follows:

1. Inspect. To determine the serviceability of an item by comparing its physical, mechanical, and/or electrical characteristics with established standards through examination (e.g., by sight, sound, or feel).

2. Test. To verify serviceability by measuring the mechanical, pneumatic, hydraulic, or electrical characteristics of an item and comparing those characteristics with prescribed standards.

3. Service. Operations required periodically to keep an item in proper operating condition, i.e., to clean (includes decontaminate, when required), to preserve, to drain, to paint, or to replenish fuel, lubricants, chemical fluids, or gases.

4. Adjust. To maintain or regulate, within prescribed limits, by bringing into proper or exact position, or by setting the operating characteristics to specified parameters.

5. Align. To adjust specified variable elements of an item to bring about optimum or desired performance.

6. Calibrate. To determine and cause corrections to be made or to be adjusted on instruments of test, measuring, and diagnostic equipments used in precision measurement. Consists of comparisons of two instruments, one of which is a certified standard of known accuracy, to detect and adjust any discrepancy in the accuracy of the instrument being compared.

7. Remove/Install. To remove and install the same item when required to perform service or other maintenance functions. Install may be the act of emplacing, seating, or fixing into position a spare, repair part, or module (component or assembly) in a manner to allow the proper functioning of an equipment or system.

8. Replace. To remove an unserviceable item and install a serviceable counterpart in its place. "Replace" is authorized by the MAC and assigned maintenance level is shown as the third position code of the Source, Maintenance, and Recoverability (SMR) code.

9. Repair. The application of maintenance services, including fault location/troubleshooting, removal/installation, disassembly/assembly procedures, and maintenance actions to identify troubles and restore serviceability to an item by correcting specific damage, fault, malfunction, or failure in a part, subassembly, module (component or assembly), end item, or system.

NOTE

The following definitions are applicable to the "repair" maintenance function:

Services — Inspect, test, service, adjust, align, calibrate, and/or replace.

Fault location/troubleshooting — The process of investigating and detecting the cause of equipment malfunctioning; the act of isolating a fault within a system or Unit Under Test (UUT).

Disassembly/assembly — The step-by-step taking apart (or breakdown) of a spare/functional group coded item to the level of its least component identified as maintenance significant (i.e., assigned an SMR code) for the level of maintenance under consideration.

Actions — Welding, grinding, riveting, straightening, facing, machining, and/or resurfacing.

10. Overhaul. That maintenance effort (service/action) prescribed to restore an item to a completely serviceable/operational condition as required by maintenance standards in appropriate technical publications. Overhaul is normally the highest degree of maintenance performed by the Army. Overhaul does not normally return an item to like new condition.

11. Rebuild. Those services/actions necessary for the restoration of unserviceable equipment to a like new condition in accordance with original manufacturing standards. Rebuild is the highest degree of materiel maintenance applied to Army equipment. The rebuild operation includes the act of returning to zero those age measurements (e.g., hours/miles) considered in classifying Army equipment/components.

Explanation of Columns in the MAC

Columns (1) and (2) - Functional Groups. The functional groupings in the sample below identify maintenance significant components, assemblies, subassemblies, and modules with the next higher assembly.

GROUP NUMBER	DESCRIPTION
04	POWER PLANT
0401	ENGINE, GENERAL Servicing, handling inspection requirements, overhaul and retirement schedules. External lines and hoses. (As applicable.)

GROUP NUMBER	DESCRIPTION
0405	ACCESSORY GEAR BOX (ACCESORY SECTION MODULE) Input and output gears, seals, chip detector, housings, drive shaft, bearings.

0402	COMPRESSOR SECTION (COLD SECTION MODULE) Rotor, blades, vanes, impeller, stators, inlet guide vanes, mainframe, particle seperator, bleed valve, bearings, seals, external lines and hoses.	0406	FUEL SYSTEM Fuel control, fuel boost pump, governors, fuel filter assembly, sequence valve, fuel manifold, fuel nozzle, external lines and hoses.
0403	COMBUSTION SECTION (HOT SECTION MODULE) Liners, nozzles, stators, rotor, seals, couplings, blades.	0407	ELECTRICAL SYSTEM Electrical control units, exciters, thermocouples, ignition harness, electrical cables, history record, torque overspeed sensor, Np sensor, external lines and hoses.
0404	POWER-TURBINE (POWER TURBINE MODULE) Nozzles, rotors, blades, exit guide vanes, exhaust frame, drive shaft, bearings, seals, external lines and hoses	0408	OIL SYSTEM Tanks, oil filter, oil cooler, lube and scavenger pumps, oil filter bypass sensor, external lines and hoses.

Column (3) — Maintenance Function. Column (3) lists the functions to be performed on the items listed in column (2).

Column (4) — Maintenance Level. The maintenance levels AVUM, AVIM, and DEPOT are listed on the MAC with individual columns that include the work times for maintenance functions at each maintenance level. Work time presentations such as "0.1" indicate the average time (expressed in manhours in whole hours or decimals) it requires a maintenance level to perform a specified maintenance function. If a work time has not been established, the columnar presentation will indicate "--." Maintenance levels higher than the level of maintenance indicated are authorized to perform the indicated function.

Column (5) — Tools and Equipment Reference Code. Column (5) specifies, by code, those common tool sets (not individual tools), common TMDE, and special tools, special TMDE, and special support equipment required to perform the designated function.

Column (6) — Remarks Code. When applicable, this column contains a letter code, in alphabetical order, which is keyed to the remarks.

Explanation of Columns in the Tools and Test Equipment Requirements

Column (1) — Tool or Test Equipment Reference Code. The tool or test equipment reference code correlates with a code used in column (5) of the MAC.

Column (2) — Maintenance Level. The lowest level of maintenance authorized to use the tool or test equipment.

Column (3) — Nomenclature. Name or identification of the tool or test equipment.

Column (4) — National Stock Number (NSN). The NSN of the tool or test equipment.

Column (5) — Tool Number. The manufacturer's part number.

Explanation of Columns in the Remarks

Column (1) — Remarks Code. The code recorded in column (6) of the MAC.

Column (2) — Remarks. This column lists information pertinent to the maintenance function being performed as indicated in the MAC."

5.3.3 MAC work package **<macwp>**. This work package shall be prepared in Functional Group Code (FGC) sequence to consolidate and identify those groups on the list which involve identified maintenance functions. The MAC shall be prepared according to the approved source data provided by the acquiring activity.

5.3.3.1 MAC entries.

a. The basic entries in the MAC shall be a list of functional groups applicable to the end item which require maintenance. The term functional group applies to reparable assemblies and subassemblies, i.e., spares (any reparable component required for the maintenance or repair of an end item), but not to repair parts (any consumable, nonreparable component required for the maintenance or repair of an end item). The end item group shall be numbered "00," or its equivalent "AA."

b. Entries shall be item names (a basic name and a noun word or phrase modifier, e.g., transformer, pulse, low power) and, where applicable, type designators, without stock or part numbers (P/Ns) if possible, in order to minimize need for subsequent change; however, entries shall contain positive identification. Parts that are not subject to maintenance shall not be listed in table 1 of the MAC.

c. All item names of MAC functional groups shall be official nomenclature in accordance with the RPSTL nomenclature or other source as specified by the acquiring activity. Reverse word order shall be used in the MAC.

d. The maintenance code entered in the third position of the Source, Maintenance, and Recoverability (SMR) code in the RPSTL shall be used to identify the lowest category of maintenance that is authorized to remove, replace, and use the spare or repair parts. SMR codes are further defined in MIL-STD-40051-5A.

e. If the maintenance function is a replace function only for a repair part, the repair part shall not be listed in the MAC, unless not listing the repair part would result in omission of the Next Higher Assembly (NHA) group number; in this case, the part shall be listed in order to list the NHA functional group number.

f. All items in the MAC shall specify the maintenance level(s) to which a function is authorized.

g. Exception is authorized to ammunition MACs to permit use of maintenance function headings that better describe or identify ammunition peculiar maintenance functions. The headings used and their definitions shall be included in the appropriate ammunition TM(s).

5.3.3.2 MAC format. The MAC **<mac> (standard information)** shall be prepared in the format shown in figure 4 (standard) or figure 5 (aviation) **<avmac> (standard information)**, as applicable.

a. For an explanation of data to be listed in columns of the MAC, refer to the introduction information presented in 5.3.1 or 5.3.2 as applicable.

b. The group number **<groupno>** shall be entered in column 1, the nomenclature of the spare (component/assembly) **<compassem>** shall be entered in column 2, and the maintenance function **<maintfunc>** shall be listed in column 3 of the MAC.

c. Column 4 of the standard MAC shall be divided into four main headings, one for each level of maintenance **<maintclass>** (i.e., unit **<unit>**, direct support **<direct>**, general support **<gensup>**, and depot **<depot>**). Column 4 of the three-level aviation MAC **<avmaintclass>** shall be divided into three main headings (i.e., AVUM or unit **<avum>**, AVIM or intermediate **<avim>**, and depot **<depot>**).

d. A work time figure must appear in the subcolumn for the maintenance level authorized to perform the maintenance listed in column 3.

e. Reference numbers for all required tools and test equipment **<terefs>** shall be listed in column 5 of the MAC. These reference numbers shall correspond to the appropriate tools/test equipment listed in the tools and test equipment table.

f. Reference letters for applicable remarks **<remarkrefs>** shall be listed in column 6 of the MAC. These reference letters shall correspond to the appropriate remarks listed in the remarks table.

5.3.3.3 Tools and test equipment requirements **<tereqtab>**. A tabular list **(standard information)** of all tools and test equipment, both special and common, required to maintain the equipment shall be prepared in accordance with the format shown in figure 6 or figure 7 , as applicable. Common tools shall not be included on this list when they are part of an existing set, kit, or outfit authorized to the intended user; however, the authorized set, kit, or outfit which contains the prescribed common tools shall be listed.

5.3.3.4 Remarks **<remarktab>**. Remarks **(standard information)** pertinent to maintenance functions shall be prepared in accordance with the format shown in figure 6 or 7 , as applicable.

5.4 RPSTL work package **(-20/AVUM level or above only) <rpstlwp>**. This work package shall be prepared in accordance with MIL-STD-40051-5A.

5.5 Components of end item (COEI) and basic issue items (BII) lists work package **(operator only) <coeibiiwp>**. This work package shall be prepared as an inventory for the equipment to ensure safe and efficient operation. The data described in 5.5.1 through 5.5.3 shall be prepared.

5.5.1 Introduction for COEI and BII lists work package **(operator only) <intro>**. The following introduction shall be prepared and included verbatim. (Refer also to figure 8.)

"**COMPONENTS OF END ITEM (COEI) AND BASIC ISSUE ITEMS (BII) LISTS**

INTRODUCTION

Scope

This work package lists COEI and BII for the *(insert the short end item name)* to help you inventory items for safe and efficient operation of the equipment.

General

The COEI and BII information is divided into the following lists:

Components of End Item (COEI). This list is for information purposes only and is not authority to requisition replacements. These items are part of the *(enter name of end item)*. As part of the end item, these items must be with the end item whenever it is issued or transferred between property accounts. Items of COEI are removed and separately packaged for transportation or shipment only when necessary. Illustrations are furnished to help you find and identify the items.

Basic Issue Items (BII). These essential items are required to place the *(enter name of end item)* in operation, operate it, and to do emergency repairs. Although shipped separately packaged, BII must be with the *(enter name of end item)* during operation and when it is transferred between property accounts. Listing these items is your authority to request/requisition them for replacement based on authorization of the end item by the TOE/MTOE. Illustrations are furnished to help you find and identify the items.

Explanation of Columns in the COEI List and BII List

Column (1) — Illus Number. Gives you the number of the item illustrated.

Column (2) — National Stock Number (NSN). Identifies the stock number of the item to be used for requisitioning purposes.

Column (3) — Description, CAGEC, and Part Number. Identifies the Federal item name (in all capital letters) followed by a minimum description when needed. The stowage location of COEI and BII is also included in this column. The last line below the description is the CAGEC (commercial and Government entity code) (in parentheses) and the part number.

Column (4) — Usable On Code. When applicable, gives you a code if the item you need is not the same for different models of equipment. *(Add the following only as applicable. Replace Xs with appropriate codes and model numbers.) These codes are identified below:*

Code	***Used on***
XXX	*Model XXX*
XXX	*Model XXXX*
XXX	*Model XXXXX*

Column (5) — Unit of Measure (U/M). Indicates the physical measurement or count of the item as issued per the National Stock Number shown in column (2).

Column (6) — Qty Rqr. Indicates the quantity required."

5.5.2 COEI list **<coei>**. This list shall be prepared as an illustrated tabular list of components of the end item (spare/repair parts that are removed from the major end item and separately packaged or stowed for transportation or movement; includes on-board spares). The illustrations shall be placed above the list. The arrangement of the illustrations and list shall be similar to that shown in figure 8.

5.5.2.1 List **<coeitab>**. The COEI list **(standard information)** shall include the headings and basic content shown in figure 8, applicable to the specific equipment. The description of each item shall consist of the approved Federal item name **<desc>**, followed by a short description when needed. Items shall be listed alphabetically. The Commercial and Government Entity Code (CAGEC) **<cageno>** shall be located below the item and in parentheses. The part number **<partno>** shall follow the CAGEC. The stowage location of COEI shall also be included in the description column. When more than one model or configuration is applicable and Usable On Codes (UOC) **<uoc>** are assigned, the UOC shall appear in a separate column adjacent to the description column. (Refer to figure 8.) When on-board spares apply, there shall be a break in the text of the list and a new heading ON-BOARD SPARES shall be used. A list of the on-board spares shall appear in the same format as required for the basic COEI list.

5.5.3 BII list **<bii>**. This tabular list **(standard information)** shall be prepared in the same format and include similar content (tailored to the applicable BII) as required for the COEI list. The stowage location of BII shall also be included in the description column. (Refer to 5.5.1 and figure 8 .)

5.6 AAL work package **(operator only) <aalwp>**. This work package shall list all AAL items (i.e., items not issued with the end item; not listed on the end item engineering drawing as part of the end item, National Stock Number (NSN) configuration; not required to be turned in with the end item; separately authorized by MTOE, TDA, CTA, or JTA; and provided for information only). The data described in 5.6.1 and 5.6.2 shall be prepared.

5.6.1 Introduction **<intro>**. The following introduction (text below within the quotation marks) shall be prepared and included verbatim. (Refer also to figure 9.)

"**ADDITIONAL AUTHORIZATION LIST (AAL)**

INTRODUCTION

Scope

This work package lists additional items you are authorized for the support of the *(enter short item name).*

General

This list identifies items that do not have to accompany the *(enter short item name)* and that do not have to be turned in with it. These items are all authorized to you by CTA, MTOE, TDA, or JTA.

Explanation of Columns in the AAL

Column (1) — National Stock Number (NSN). Identifies the stock number of the item to be used for requisitioning purposes.

Column (2) — Description, Commercial and Government Entity Code (CAGEC), and Part Number (P/N). Identifies the Federal item name (in all capital letters) followed by a minimum description when needed. The last line below the description is the CAGEC (in parentheses) and the part number.

Column (3) — Usable On Code. When applicable, gives you a code if the item you need is not the same for different models of equipment. *(Add the following only as applicable. Replace Xs with appropriate codes and model numbers.) These codes are identified below:*

Code	***Used on***
XXX	*Model XXX*
XXX	*Model XXXX*
XXX	*Model XXXXX*

Column (4) — Unit of Measure (U/M). Indicates the physical measurement or count of the item as issued per the National Stock Number shown in column (1).

Column (5) — Qty Recm. Indicates the quantity recommended."

5.6.2 AAL list **<aal>**. A tabular list **(standard information)** of all additional authorized items shall be prepared. The format and general content of the list shall be prepared as shown in figure 9. The headings and subsequent information for this list shall be the same as the COEI and BII lists except the ILLUS NUMBER column required for the COEI and BII lists shall not apply since there are no illustrations used, and the QTY column shall be QTY RECM (quantity recommended). The items shall be listed alphabetically.

5.7 Expendable and durable items list work package **<explistwp>** . This work package shall be prepared to provide the TM user a list of all expendable and durable items called out in the TM text which are necessary to operate and/or maintain the equipment. The following data described in 5.7.1 and 5.7.2 shall be included.

5.7.1 Introduction for expendable and durable items list work package **<intro>**. The following introduction (text below within the quotation marks) shall be prepared and included verbatim. (Refer also to figure 10).

"**EXPENDABLE AND DURABLE ITEMS LIST**

INTRODUCTION

Scope

This work package lists expendable and durable items that you will need to operate and maintain the *(enter equipment/end item name)*. This list is for information only and is not authority to requisition the listed items. These items are authorized to you by CTA 50-970, Expendable/Durable Items (Except Medical, Class V Repair Parts, and Heraldic Items), or CTA 8-100, Army Medical Department Expendable/Durable Items.

Explanation of Columns in the Expendable/Durable Items List

Column (1) — Item Number. This number is assigned to the entry in the list and is referenced in the narrative instructions to identify the item (e.g., Use brake fluid (item 5, WP 0098 00).).

Column (2) — Level. This column identifies the lowest level of maintenance that requires the listed item *(include as applicable: C = Operator/Crew, O = Unit/AVUM, F = Direct Support/AVIM, H = General Support, D = Depot).*

Column (3) — National Stock Number (NSN). This is the NSN assigned to the item which you can use to requisition it.

Column (4) — Item Name, Description, Commercial and Government Entity Code (CAGEC), and Part Number (P/N). This column provides the other information you need to identify the item.

Column (5) — Unit of Measure (U/M). This code shows the physical measurement or count of an item, such as gallon, dozen, gross, etc."

5.7.2 Expendable and durable items list **<explist>**. This list **(standard information)** shall be prepared in tabular format as shown in figure 10. No illustrations shall be prepared for these items. Items appearing in the tabular list shall appear in alphabetical sequence by item name. Items to be listed shall be those approved by the acquiring activity.

5.8 Tool identification list work package **(-20/AVUM level or above only) <toolidwp>**. This work package shall include a list of the tools authorized to the levels of maintenance covered in the narrative portion of the TM and as referenced by the initial setups. For **DMWRs** a list of all special tools and test, measurement, and diagnostic equipment not contained in lower level technical manuals or in the parts information database or RPSTL, and required to perform the procedures in the DMWR, shall be included. This list shall include any special inspection equipment used only for the item that the DMWR covers.

5.8.1 Introduction for tool identification list work package **(-20/AVUM level or above only) <intro>**. The following introduction (text below within the quotation marks) shall be prepared and included verbatim. (Refer to figure 11.)

"**TOOL IDENTIFICATION LIST**

INTRODUCTION

Scope

This work package lists all common tools and supplements and special tools/fixtures needed to maintain the *(insert equipment name).*

or

This work package lists special tools and equipment needed to maintain the *(insert equipment name)*." **(DMWRs only)**

Explanation of Columns in the Tool Identification List

Column (1) — Item Number. This number is assigned to the entry in the list and is referenced in the initial setup to identify the item (e.g., Extractor (item 32, WP 0090 00)).

Column (2) — Item Name. This column lists the item by noun nomenclature and other descriptive features (e.g., Gage, belt tension).
Column (3) — National Stock Number. This is the National Stock Number (NSN) assigned to the item; use it to requisition the item.

Column (4) — Part Number/CAGEC. Indicates the primary number used by the manufacturer (individual, company, firm, corporation, or Government activity) which controls the design and characteristics of the item by means of its engineering drawings, specifications, standards, and inspection requirements to identify an item or range of items. The manufacturer's Commercial and Government Entity Code (CAGEC) is also included.

Column (5) — Reference. This column identifies the authorizing supply catalog or RPSTL for items listed in this work package." (**Not required for DMWRs**)

5.8.2Tool identification list **<toolidlist>**. Applicable information for this tabular list **(standard informaton)** shall be prepared and formatted as shown in figure 11. Item names shall be in alphabetical order.

5.9 Mandatory replacement parts work package **(-20/AVUM level or above only) <mrplwp>**. This work package shall list all mandatory replacement parts referenced in the task initial setups and procedures. For **DMWRs** a mandatory replacement parts list, consisting of all items that must be replaced during the repair and overhaul of the equipment, whether or not they have been disturbed or not shall be developed. When an item or component is not disassembled based on preshop analysis (PSA), the item will not be disassembled for the sole purpose to add a mandatory part. All items that must be replaced during overhaul or repair procedures (based on usage intervals such as miles, time, or rounds fired, or replaced on a time between overhaul (TBO) interval) shall be included in the parts list table. A reference shall be made to the TM that covers the equipment. This work package shall include an introduction **<intro>** and a tabular list **<mrpl> (standard table)** of mandatory replacement parts. Items in the list shall be identified by an item number **<itemno>**, P/N/CAGEC **<partno>**, NSN **<nsn>**, nomenclature **<name>**, and quantity **<qty>**. Items shall be listed in alphanumeric order by P/N. (Refer to figure 12.)

5.10 Critical safety items (CSI) and flight safety critical aircraft parts (FSCAP) work package <**csi.fscap.wp**>.

5.10.1 Critical safety items (CSI) **<csi**>. As applicable, this work package shall include a tabular listing of all CSI required by AMC-R 702-32 and provided by the acquiring activity. Each CSI and associated characteristic(s) shall be clearly identified within overhaul/repair procedures. The location of the critical safety procedures or processes within the depot maintenance work packages shall be referenced.

5.10.2 Flight safety critical aircraft parts (FSCAP) <**fscap**>. For aircraft, Flight Safety Critical Aircraft Parts (FSCAP) and installations identified under the FSCAP program shall require special handling during overhaul. A critical characteristic is any feature throughout the life cycle of a FSCAP, such as dimension, tolerance, finish, material or assembly, manufacturing process, inspection process, operation, field maintenance requirement, depot overhaul requirement, or other feature that if nonconforming, missing, or degraded, could cause failure or malfunction of a FSCAP. FSCAPs shall be listed (Refer to figure 13) by their nomenclature, part number, CAGEC, and critical characteristic. Throughout the work package, warnings shall be included emphasizing critical instructions to be followed. These warnings are FSCAP warnings and inserted whenever necessary.

5.11 Support items work package <**supitemwp**>. This work package shall combine any the supporting lists described in 5.5 through 5.10, as applicable. This work package shall be developed when the data contained in these supporting lists are minimal and creating a separate work package for each list is unnecessary. The work package may include an introduction and the applicable lists described in 5.5 through 5.10.

5.12 Additional work packages <**genwp**>. Additional work packages may be prepared when the work packages previously described herein will not support the data/information to be presented.

6. NOTES.

The notes in section 6 of MIL-STD-40051A apply to this Part.

REPRINTED WITHOUT CHANGE

REFERENCES

This work package lists all field manuals, forms, technical manuals and miscellaneous publications referenced in this manual.

FIELD MANUALS

FM 31-70	Basic Cold Weather Manual
FM 90-3	Desert Operations
FM 21-11	First Aid for Soldiers
FM 90-6	Mountain Operations
FM 3-3	NBC Decontamination Avoidance
FM 3-19	NBC Reconnaissance
FM 31-71	Northern Operations
FM 9-207	Operation and Maintenance of Ordnance Material in Cold Weather
FM 20-22	Vehicle Recovery Operations

FORMS

DD 518	Accident Identification Card
DA Form 2408-9	Equipment Control Record
DA Form 2404	Equipment Inspection and Maintenance Worksheet
DA Form 2408	Equipment Log Assembly (Records)
DA Form 2062	Hand Receipt
SF 91	Motor Vehicle Accident Report
DA Form 2408-20	Oil Analysis Log
SF 368	Product Quality Deficiency Report
DA Form 2028	Recommended Changes to Publications and Blank Forms
DA Form 2028-2	Recommended Changes to Equipment Technical Publications
DA Form 2408-14	Uncorrected Fault Record
DA Form 2408-4	Weapon Record Data

TECHNICAL MANUALS

TM 9-1300-200	Ammunition, General
TM 750-244-6	Destruction of TACOM Equipment
TM 11-5695-286-14	Hand Set Microphone

FIGURE 1. Example of references. ✠

MAINTENANCE ALLOCATION CHART (MAC)

The Army Maintenance System MAC

This introduction provides a general explanation of all maintenance and repair functions authorized at various maintenance levels under the standard Army Maintenance System concept.

The MAC (immediately following the introduction) designates overall authority and responsibility for the performance of maintenance functions on the identified end item or component. The application of the maintenance functions to the end item or component shall be consistent with the capacities and capabilities of the designated maintenance levels, which are shown on the MAC in column (4) as:

Unit - includes two subcolumns, C (operator/crew) and O (unit) maintenance.

Direct Support - includes an F subcolumn.

General Support - includes an H subcolumn.

Depot - includes a D subcolumn.

The tools and test equipment requirements (immediately following the MAC) list the tools and test equipment (both special tools and common tool sets) required for each maintenance function as referenced from the MAC.

The remarks (immediately following the tools and test equipment requirements) contain supplemental instructions and explanatory notes for a particular maintenance function.

STANDARD FORMAT

FIGURE 2. Example of a standard MAC introduction.

MAINTENANCE ALLOCATION CHART (MAC)

Aviation Maintenance Allocation Chart

This Maintenance Allocation Chart (MAC) assigns maintenance functions in accordance with the Aviation Maintenance concept for Army aviation. These maintenance levels - Aviation Unit Maintenance (AVUM), Aviation Intermediate Maintenance (AVIM), and Depot Maintenance - are depicted in the MAC as:

AVUM - corresponds to an O code in the Repair Parts and Special Tools List (RPSTL).

AVIM - corresponds to an F code in the Repair Parts and Special Tools List (RPSTL).

DEPOT - corresponds to a D code in the Repair Parts and Special Tools List (RPSTL).

The maintenance to be performed below depot and in the field is described as follows:

Aviation Unit Maintenance (AVUM). AVUM activities will be staffed and equipped to perform high frequency "On-Aircraft" maintenance tasks required to retain or return aircraft systems to a serviceable condition. The maintenance capability of the AVUM will be governed by the Maintenance Allocation Chart (MAC) and limited by the amount and complexity of ground support equipment (GSE), facilities required, authorized manning strength, and critical skills available. The range and quantity of authorized spare modules/components will be consistent with the mobility requirements dictated by the air mobility concept. (Assignments of maintenance tasks to divisional company size aviation units will consider the overall maintenance capability of the division, the requirement to conserve personnel and equipment resources, and air mobility requirements.)

THREE-LEVEL FOR ARMY AVIATION FORMAT

FIGURE 3. Example of an aviation MAC introduction.

Table 1. MAC for TSEC/ST-34.

(1) GROUP NUMBER	(2) COMPONENT/ASSEMBLY	(3) MAINTENANCE FUNCTION	(4) MAINTENANCE LEVEL UNIT C	UNIT O	DIRECT SUPPORT F	GENERAL SUPPORT H	DEPOT D	(5) TOOLS AND EQUIPMENT REF CODE	(6) REMARKS CODE
00	TSEC/ST-34	Inspect	0.1						A
		Service	0.2						B
		Replace	0.4					1	C,D
		Test	0.3						E
		Repair			1.5			1-2	F
		Repair				2.0		1-5	G,H
		Repair					2.0	1-9	I
		Overhaul					16.0	1-9	J
01	POWER UNIT, STP-34	Inspect	0.1						A
		Test	0.3						E
		Repair			1.8			1-2	F
		Repair				2.0		1-5	G,J
		Repair					2.0	1-9	H
0101	PRINTED CIRCUIT BOARDS, STP-34								
010101	E-EB0/1	Inspect			0.1				A
		Test			0.5			1,2	E
		Test					1.0	1-3,6-8	I
		Replace			0.5			1	
		Repair					2.0	1-4,6-8	G
010102	SWITCHING ASSEMBLY	Inspect	0.1		0.1			1	A
		Replace	0.5		0.5			1	
		Test					1.0	1-3,6-8	
		Repair					2.0	1-4,6-8	H
02	LOGIC UNIT, STB-34	Inspect							A
		Test							E
		Repair			1.0			1-2	F
		Repair				2.0		1-5	G,J
0201	PRINTED CIRCUIT BOARDS, STB-34	Inspect			1.0				A
		Test			0.2				E
		Test				1.0		1-3,5	J
		Replace			0.3			1	
		Repair				2.0		2-5	G

FIGURE 4. Example of a standard MAC.

Table 1. MAC for T-XXX Turbine Engine.

(1) GROUP NUMBER	(2) DESCRIPTION	(3) MAINTENANCE FUNCTION	(4) MAINTENANCE LEVEL AVUM (O)	AVIM (F)	DEPOT (D)	(5) TOOLS & EQUIP REF CODE	(6) REMARKS CODE
04	POWER PLANT						
0401	ENGINE, TURBINE	Inspect	--			1	A
		Test	--				B
		Test		-- (3)			
		Test			--		
		Service	0.2				C
		Install	--				
		Replace	--				
		Repair	--				
		Repair		-- (4)			A
		Overhaul			--		
040101	EXTERNAL LINES & HOSES	Inspect	--			3	D
		Test		--			
		Install	--				
		Replace	--				
		Repair		--			
0402	COMPRESSOR SECTION (COLD SECTION MODULE)	Inspect	0.1				E
		Inspect		0.2			
		Test		--			
		Service	0.2				
		Repair	0.4				
		Repair		0.6			
		Overhaul			--		

FIGURE 5. Example of an aviation MAC.

Table 2. Tools and Test Equipment for TSEC/ST-34.

TOOL OR TEST EQUIPMENT REF CODE	MAINTENANCE LEVEL	NOMENCLATURE	NATIONAL STOCK NUMBER	TOOL NUMBER
1	H	Automatic test system ST-51	5810-00-089-4599	TSEC/ST-51
2	F	Multimeter, digital	6625-01-139-2512	AN/PSM-45
3	D	Multimeter, digital	6625-01-145-2430	AN/USM 486
4	H	Oscilliscope	6625-01-187-7847	AN/USM-488
5	D	Power supply (0-35 VDC 2.4A)	6130-00-006-5224	HP 6434B86
6	D	Power supply tester	N/A	ON502427
7	H	Repair and soldering center (page)	4940-01-031-4541	PRC-350C/equip
8	F	Tool, kit, electronic equipment	5180-00-610-8177	TK-105/6

Table 3. Remarks for TSEC/ST-34.

REMARKS CODE	REMARKS
A	External.
B	Preventive maintenance checks and services (PMCS).
C	Replace rack installed unit, 0.4 hrs.
D	Bench top use only, 0.1 hrs.
E	Self-test.
F	Repair by PMA and authorized component replacement only.
G	Complete unit and subassembly repair (except STP-34 switching assembly and E-EBO/1).
H	Complete unit and subassembly repair.
I	In compliance with TSEC/ST-34 CIDOS.
J	Function performed by specialized repair activity (SRA). (Theater COMSEC Logistics Support Center-Europe or Lexington-Blue Grass Army Depot)

FIGURE 6. Example of a standard MAC tools and test equipment and remarks tables.

Table 2. Tools and Test Equipment for T-XXX Turbine Engine.

TOOL OR TEST EQUIPMENT REF CODE	MAINTENANCE LEVEL	NOMENCLATURE	NATIONAL STOCK NUMBER	TOOL NUMBER
1	AVUM/AVIM	Sling, aircraft maintenance	1730-00-903-5019	LTCT 773
2	AVUM/AVIM	Wrench, crowfoot	5120-00-034-6193	LTCT 4810
3	AVIM	Wrench, socket	5120-00-875-2588	LTCT 393
4	AVIM	Wrench, spanner	5120-00-886-1794	LTCT 9263

Table 3. Remarks for T-XXX Turbine Engine.

REMARKS CODE	REMARKS
A	Diagnostic inspection using borescope.
B	Functional test at AVUM - engine in airframe.
C	Functional test at AVIM - engine in METS.
D	Repair at AVIM includes the engine assembly, individual line replacement units (LRU) (accessories) and modules.
E	Replace seal.
F	Repair limited to replacement of rotor assembly, stator, stage 1 nozzle, face type seal, and combustion liner.
G	Repair limited to replacement of external lines, hoses, and line replacement units (LRU) (accessories).
H	Replacement of carbon seal.
I	Reset button.
J	Water wash.
K	Visible inspection without detailed disassembly.
L	All repair and replacement of parts performed by AVUM is limited to authorized items listed in TM (cite specific TM-20P or -23P).

FIGURE 7. Example of aviation MAC tools and test equipment and remarks tables.

COMPONENTS OF END ITEM (COEI) AND BASIC ISSUE ITEMS (BII) LISTS

This work package lists COEI and BII for the M198 howitzer to help you inventory items for safe and efficient operation of the equipment.

General

The COEI and BII information is divided into the following lists:

Components of End Item (COEI). This list is for information purposes only and is not authority to requisition replacements. These items are part of the M198 howitzer. As part of the end item, these items must be with the end item whenever it is issued or transferred between property accounts. Items of COEI are removed and separately packaged for transportation or shipment only when necessary. Illustrations are furnished to help you find and identify the items.

Basic Issue Items (BII). These essential items are required to place the M198 howitzer in operation, operate it, and to do emergency repairs. Although shipped separately packaged, BII must be with the M198 howitzer during operation and when it is transferred between property accounts. Listing these items is your authority to request/requisition them for replacement based on authorization of the end item by the TOE/MTOE. Illustrations are furnished to help you find and identify the items.

Explanation of Columns in the COEI List and BII List

Column (1), Illus Number, gives you the number of the item illustrated.

Column (2), National Stock Number, identifies the stock number of the item to be used for requisitioning purposes.

Column (3), Description, CAGEC, and Part Number, identifies the Federal item name (in all capital letters) followed by a minimum description when needed. The stowage location of COEI and BII is also included in this column. The last line below the description is the CAGEC (commercial and Government entity code) (in parentheses) and the part number.

Column (4), Usable on Code, gives you a code if the item you need is not the same for different models of equipment. These codes are identified below:

Code	Used on
PAA	Model XXX
PAB	Model XXXX
PAC	Model XXXXX

Column (5), U/M (unit of measure), indicates how the item is issued for the National Stock Number shown in column (2).

Column (6), Qty Rqr, indicates the quantity required.

FIGURE 8. Example of components of end item and basic issue items lists.

2

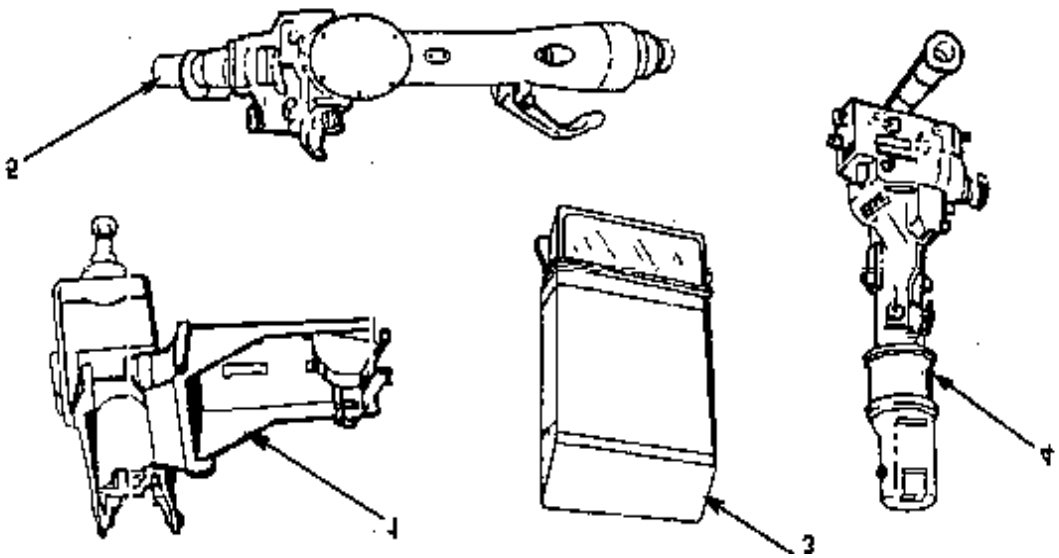

Table 1. Components of End Item List.

(1) ILLUS NUMBER	(2) NATIONAL STOCK NUMBER	(3) DESCRIPTION, CAGEC, AND PART NUMBER	(4) USUABLE ON CODE	(5) U/M	(6) QTY RQR
1	1005-00-706-8880	MOUNT, MACHINE GUN:cal. .50 (in mount on cupola) (19204) 7068880	PAA	EA	1
2	1240-00-344-4643	PERISCOPE:M27 (chief of section) (stowage box cab wall) (19200) 7633132	PAA	EA	1
3	1240-00-509-2743	PERISCOPE:M45 (driver's) (stowage box driver's compartment) (19200) 8213430	PAA	EA	3
4	1240-00-864-2930	TELESCOPE, PANORAMIC M117 (in mount M145 or telescope box) (19200) 7660400	PAA	EA	1
5	1240-00-491-9676	TELESCOPE, ELBOW: M118CA1 (in mount M146) (19200) 10559855	PAB	EA	1

FIGURE 8. Example of components of end item and basic issue items lists- Continued.

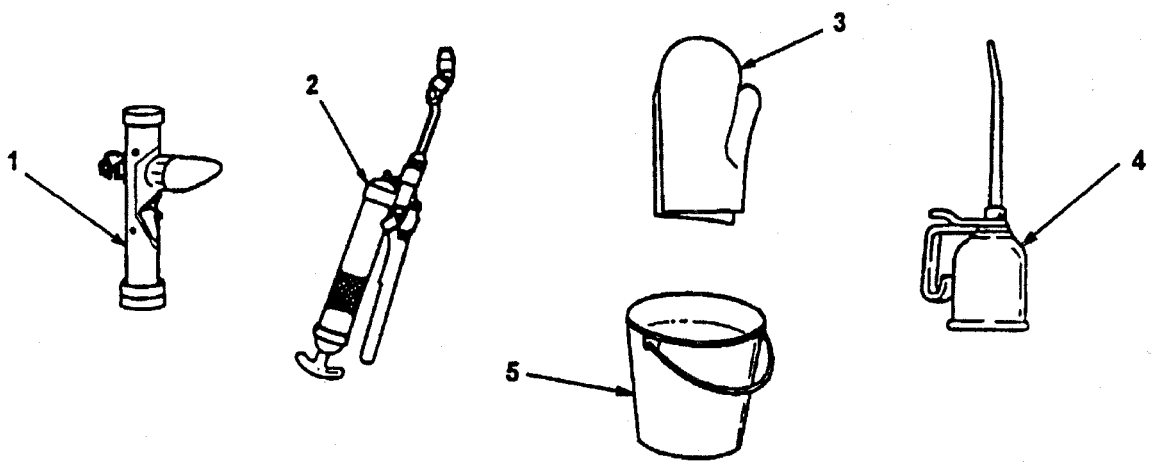

Table 2. Basic Issue Items List.

(1) ILLUS NUMBER	(2) NATIONAL STOCK NUMBER	(3) DESCRIPTION, CAGEC, AND PART NUMBER	(4) USUABLE ON CODE	(5) U/M	(6) QTY RQR
1	1290-00-535-7629	LIGHT, AIMING POST; M14 (19200) 7197188	PAA	EA	2
2	4930-00-766-3545	LUBRICATING GUN, HAND: high pressure (in tool bag) (36251) 102758	PAA	EA	1
3	8415-00-266-8843	MITTENS, CLOTH: (pair) M1942 (in oddment tray) (19207) 11655982	PAA	PR	2
4	4930-00-262-8868	OILER, HAND: steel, pump type, 1pt, spout 9 lg (in left cab door stowage box) (72798) 328	PAA	EA	1
5	7240-00-160-0455	PAIL, UTILITY: 14-qt capability (on vehicle floor) (81348) RRP35	PAA	EA	1

FIGURE 8. Example of components of end item and basic issue items lists- Continued.

ADDITIONAL AUTHORIZATION LIST

This work package lists additional items you are authorized for the support of the NBCRS FOX M93A1.

General
This list identifies items that do not have to accompany the NBCRS FOX M93A1 and that do not have to be turned in with it. These items are all authorized to you by CTA, MTOE, TDA, or JTA.

Explanations of Columns in the AAL
Column (1), National Stock Number, identifies the stock number of the item to be used for requisitioning purposes.
Column (2), Description, CAGEC, and Part Number, identifies the Federal item name (in all capital letters) followed by a minimum description when needed. The last line below the description is the CAGEC (Commercial and Government Entity Code) (in parentheses) and the part number.

Column (3), Usable On Code, when applicable, gives you a code if the item you need is not the same for different models of equipment.

Column (4), U/M (unit of measure), indicates how the item is issued for the National Stock Number shown in column (1).
Column (5), Qty Recm, indicates the quantity recommended.

ADDITIONAL AUTHORIZED LIST ITEMS

Table 1. Additional Authorization List.

(1) NATIONAL STOCK NUMBER	(2) DESCRIPTION, CAGEC, AND PART NUMBER	(3) USABLE ON CODE	(4) U/M	(5) QTY RECM
	MTOE AUTHORIZED ITEMS			
6665-01-105-5623	ALARM, CHEMICAL AGENT (19200) 8762101		EA	1
1240-01-207-5787	BINOCULARS, MOD, CON M22 (19200) 9370122		EA	1
2590-01-148-7961	CABLE KIT, SPECIAL PURPOSE (19200) 223592-2000		EA	1
1080-00-623-7295	CAMOUFLAGE SCREEN WOODLAND/DST POLES (34623) 11655722		EA	1

FIGURE 9. Example of an additional authorization list.

EXPENDABLE AND DURABLE ITEMS LIST

This work package lists expendable and durable items that you will need to operate and maintain the NBCRS FOX M93A1. This list is for information only and is not authority to requisition the listed items. These items are authorized to you by CTA 50-970, Expendable/Durable Items (Except Medical, Class V Repair Parts, and Heraldic Items), or CTA 8-100, Army Medical Department Expendable/Durable Items.

Explanations of Columns in the Expendable / Durable Items List

Column (1) - Item Number. This number is assigned to the entry in the list and is referenced in the narrative instructions to identify the item (e.g., "Use lubricating oil (Item 25, WP 5230 00).").

Column (2) - Level. This column includes the lowest level of maintenance that requires the listed item (C=Operator/Crew).

Column (3) - National Stock Number. This is the NSN assigned to the item which you can use to requisition it.

Column (4) - Item Name, Description, Commercial and Government Entity Code (CAGE), and Part Number (P/N). This column provides the other information you need to identify the item.

Column (5) - Unit of Measure (U/M). This code shows the physical measurement or count of an item, such as gallon, dozen, gross, etc.

EXPENDABLE AND DURABLE ITEMS LIST

Table 1. Expendable and Durable Items List.

(1) ITEM NUMBER	(2) LEVEL	(3) NATIONAL STOCK NUMBER	(4) ITEM NAME , DESCRIPTION, CAGE, PART, NUMBER	(5) U/M
1	C	6810-00-201-0906	Alcohol, denatured, Grade III, 16 ounce bottle (81348) O-E-760	BT
2	C	8030-01-138-1666	Antiseize Compound, 250-gram tube (81349) MIL-T-5544	TU
3	C	6515-00-059-5235	Applicator, disposable, package of 1000 (58536) A-A-30016	PK
4	C	8020-00-224-8024	Brush, artist, MTL ferrule, round, tapered point, Type I, camel hair (81348) H-B-118	EA
5	C	9150-01-054-6453	Cleaner, Lubricant & Preservation (CLP), 1-pint bottle with sprayer (81349) MIL-L-63640	P

FIGURE 10. Example of an expendable and durable items list.

TOOL IDENTIFICATION LIST

This work package lists all common tools and supplements and special tools/fixtures needed to maintain the MICLIC.

Explanation of Columns in the Tool Identification List

Column (1) - Item Number. This number is assigned to the entry in the list and is referenced in the initial setup to identify the item (e.g., "Extractor (item 32, WP 0105 00)").

Column (2) - Item Name. This column lists the item by noun nomenclature and other descriptive features (e.g., "Gage, belt tension").

Column (3) - National Stock Number. This is the National Stock Number (NSN) assigned to the item; use it to requisition the item.

Column (4) - Part Number/CAGEC. Indicates the primary number used by the manufacturer (individual, company, firm, corporation, or Government activity) which controls the design and characteristics of the item by means of its engineering drawings, specifications, standards, and inspection requirements to identify an item or range of items. The manufacturer's Commercial and Government Entity Code (CAGEC) is also included.

Column (5) - Reference. This column identifies the authorizing supply catalog or RPSTL for items listed in this work package.

TOOL IDENTIFICATION LIST

Table 1. Tool Identification List.

(1) ITEM NO.	(2) ITEM NAME	(3) NATIONAL STOCK NUMBER	(4) PART NUMBER/ CAGEC	(5) REFERENCE
1	Adapter, socket wrench, 1/2 inch-3/4 inch	5120-00-114-5207	11655788-3	TM 9-2350-252-20P-1
2	Adapter, socket wrench, 3/4 inch-1 inch	5120-00-227-8104		SC 4910-95-CL-A72
3	Adapter, socket wrench, 3/8 inch-1/2 inch	5120-00-240-8703	EX503B	TM 9-2350-252-20P-1
4	Adapter, test	4910-01-138-9334	11629693-1	TM 9-1250-252-20P-1
5	Adapter, test	4910-01-138-9335	11629693-2	TM 9-1250-252-20P-1
6	Adapter, torque wrench, 1/2 inch drive,1/2 inch	5120-00-399-1157	2588756	TM 9-2350-252-20P-1
7	Adapter, torque wrench, 1/2 inch drive, 3/4 inch	5120-00-399-1154	2588757	TM 9-2350-252-20P-1
8	Adapter, torque wrench, 1/2 inch drive, 5/16 inch	5120-01-115-1891	12298105-1	TM 9-2350-252-20P-1
9	Adapter, torque wrench, 1/2 inch drive, 15/16 inch	5120-00-215-8200	11663358-2	TM 9-2350-252-20P-1
10	Adjusting tool, belt	4910-01-128-2670	3375058	TM 9-2350-252-20P-1
11	Automotive electrical tool kit	5180-00-422-8594		SC 4910-95-CL-A74
12	Bit, screwdriver, 1/4 inch drive	5120-00-316-9228	TMC105A	TM 9-2350-252-20P-1

FIGURE 11. Example of a tool identification list.

MANDATORY REPLACEMENT PARTS LIST

This work package includes a list of all mandatory replacement parts referenced in the task initial setups and procedures. These are items that must be replaced during maintenance whether they have failed or not. This includes items based on usage intervals such as miles, time, rounds fired, etc.

MANDATORY REPLACEMENT PARTS LIST

Table 1. Mandatory Replacment Parts List Semiannual (1500 Mile).

ITEM NO.	PART NUMBER/ CAGEC	NSN	NOMENCLATURE	QTY
1	HC7500Y144	4330-01-217-8184	FILTER ELEMENT, FLUID (M977/M985 ONLY)	1
2	HD223	2940-01-132-4842	FILTER ELEMENT, FLUID	1
3	MS35338-46	5310-00-637-9541	WASHER, LOCK (ALL EXCEPT M984A1)	2
4	MS35802-3	2940-00-580-6283	FILTER ELEMENT, FLUID	1
5	S-268-1	5306-01-084-5390	BOLT, MACHINE (ALL EXCEPT M984A1)	2
6	WA110	5310-01-061-5302	WASHER, LOCK	4
7	10232C	5330-01-168-8707	GASKET (M978 ONLY)	1
8	11007	5330-01-046-1990	GASKET	1
9	1112310	5330-01-225-4803	PACKING, PREFORMED (M977/M985/M984A1 ONLY)	1
10	1124510	5330-01-143-0135	PACKING, PREFORMED (M977/M985/M984A1 ONLY)	1
11	1128242	5330-01-145-1112	PACKING, PREFORMED (M977/M985/M984A1 ONLY)	1
12	11350	5330-01-147-6003	PACKING, PREFORMED	1
13	1199478	5330-01-234-7625	GASKET	1
14	1199738	4330-01-192-7664	SCREEN, BY-PASS FILTER (M977/M985/M984A1 ONLY)	1
15	1300766	4330-01-232-8305	FILTER ELEMENT, FLUID (M984A1 ONLY)	1
16	1300767	4330-01-192-8832	FILTER ELEMENT, FLUID (M977/M985/M984A1 ONLY)	1
17	2020SM	4330-01-046-3399	FILTER ELEMENT, FLUID WASHER,	1
18	2463HX	5310-01-054-5896	FLAT (ALL EXCEPT M984A1)	2
19	25010778	2910-01-022-8183	FILTER ELEMENT, FLUID	1
20	4-1/2IN77/	5330-01-163-5849	GASKET (M978 ONLY)	2

FIGURE 12. Example of a mandatory replacement parts list

Table 1. Flight Safety Critical Aircraft Parts.

PART NUMBER/ CAGEC	NOMENCLATURE	CRITICAL CHARACTERISTICS
7-211310027-3 (02731)	Cluster Gear	Process core and surface hardness.
7-113100029-3 (02731)	Spur Gear	Dimensions and contour of root area.
7-113100121-3 (02731)	Nut	Process surface hardness.
7-113100141-3 (02731)	Spindle	Process core hardness.
7-311310016-3 (02731)	Carrier Hub	Process core and surface hardness.
7-211310035-3 (02731)	Gearshaft	Process core and surface hardness.
7-211310039-5 (02731)	Gearshaft	Process core and surface hardness.
7-311310025-3 (02731)	Gear	Process core and surface hardness.

FIGURE 13. Example of a flight safety critical aircraft parts table.

CONCLUDING MATERIAL

Custodian:
Army - TM

Review Activities:
Army - AL, AR, AT, AV, CR,
CU, EA, MI, PT, SC3

Preparing Activity:
Army - TM

Project Number:
TMSS A353

Executive Director
USAMC Logistics Support Activity
ATTN: AMXLS-APA (Armstrong)
Redstone Arsenal, AL 35898-7466

STANDARDIZATION DOCUMENT IMPROVEMENT PROPOSAL

INSTRUCTIONS

1. The preparing activity must complete blocks 1,2,3, and 8. In block 1, both the document number and revision letter should be given.
2. The submitter of this form must complete blocks 4,5,6, and 7.
3. The preparing activity must provide a reply within 30 days from receipt of this form.

NOTE: This form may not be used to request copies of documents, nor to request waivers, or clarification of requirements on current contracts. Comments submitted on this form do not constitute or imply authorization to waive any portion of the referenced document(s) or to amend contractural requirements.

I RECOMMEND A CHANGE	1.DOCUMENT NUMBER MIL-STD-40051A(TM)	2.DOCUMENT DATE *(YYMMDD)* 990302

3.DOCUMENT TITLE
Preparation of Digital Technical Information for Mult-Output Presentation of Technical Manuals

4.NATURE OF CHANGE*(Identify paragraph number and include proposed rewrite, if possible. Attach extra sheets as needed.)*

5.REASON FOR RECOMMENDATION

6.SUBMITTER

a.NAME *(Last, First, Middle Initial)*	b.ORGANIZATION	
c.ADDRESS *(Include Zip Code)*	d.TELEPHONE (Include Area Code) (1)Commercial (2)AUTOVON(If applicable)	7.DATE SUBMITTED *(YYMMDD)*

8.PREPARING ACTIVITY

a.NAME USAMC Logistics Support Activity	b.TELEPHONE *(Include Area Code)* (1)Commercial (2)AUTOVON (205) 955-0852 645-0852
c.ADDRESS *(Include Zip Code)* ATTN: AMXLS-AP Redstone Arsenal, AL 35898-7466	IF YOU DO NOT RECEIVE A REPLY WITHIN 45 DAYS, CONTACT: Defense Standardization Program Office 8725 John J. Kingman Road, Suite 2533 Fort Belvoir, Virginia 22060-6221 Telephone (703) 767-6888 DSN 427-6888